TILCARA

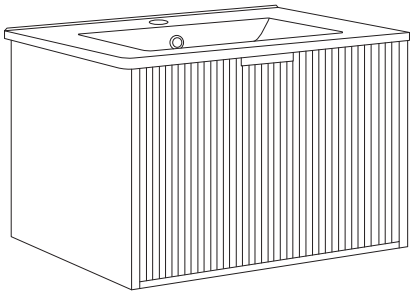

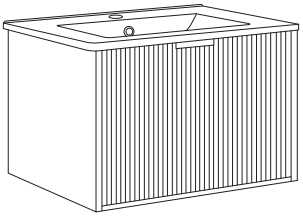

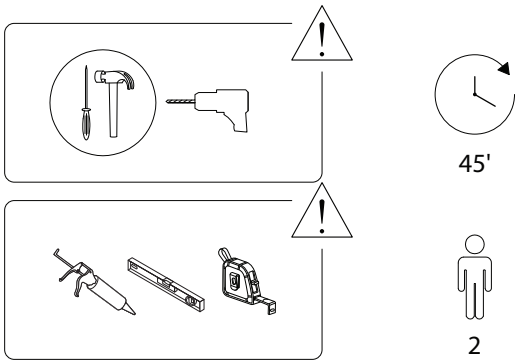
45'
2

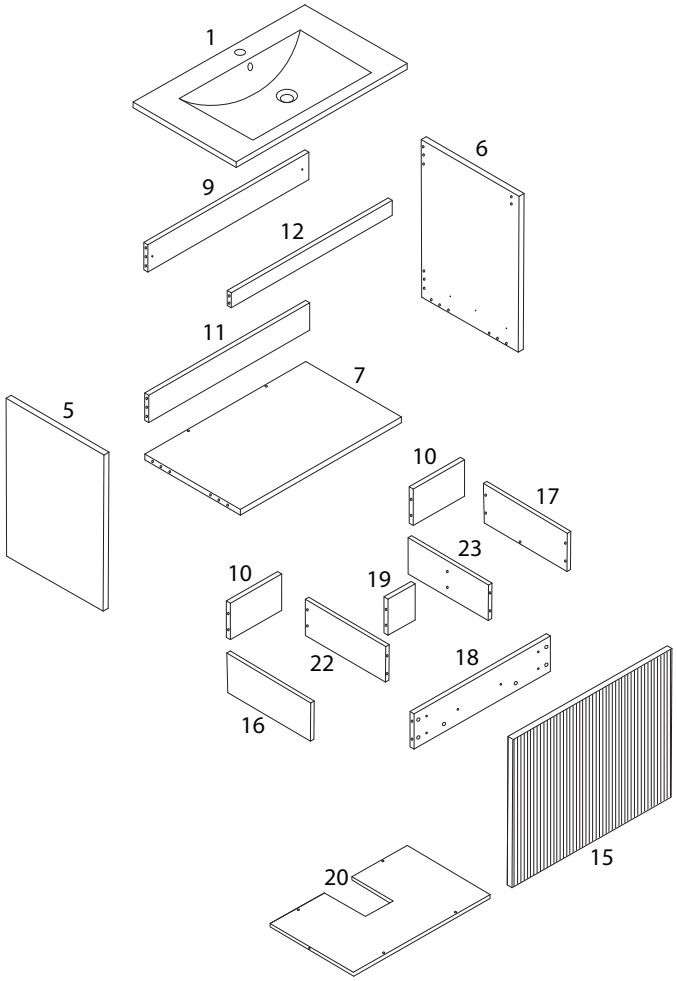
1
6
9
12
11
7
5
10
17
23
10
19
22
18
16
15
20

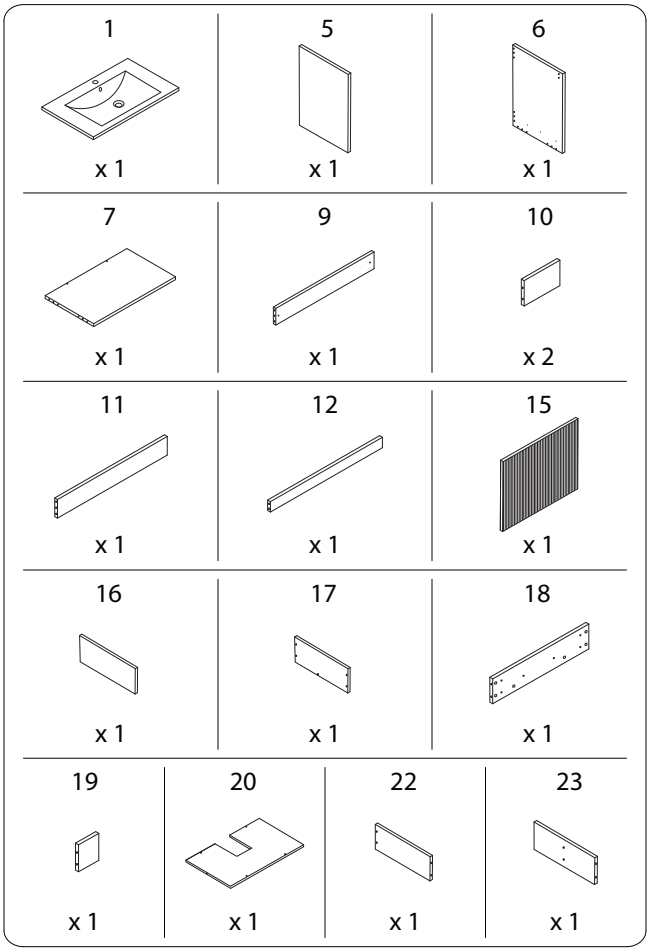
1
x 1
5
x 1
6
x 1
7
x 1
9
x 1
10
x 2
11
x 1
12
x 1
15
x 1
16
x 1
17
x 1
18
x 1
19
x 1
20
x 1
22
x 1
23
x 1

N1	N2	N4
x 44	x 44	x 12
N5	N7L	N7R
x 1	x 1	x 1
N10	N11	N12
M4 x 14	M4 x 25	M6 x 25
x 26	x 4	x 2
N13A	N13B	N13C
	M6 x 70	
x 2	x 2	x 2

1

5	6	7	N1
x 1	x 1	x 1	x 18

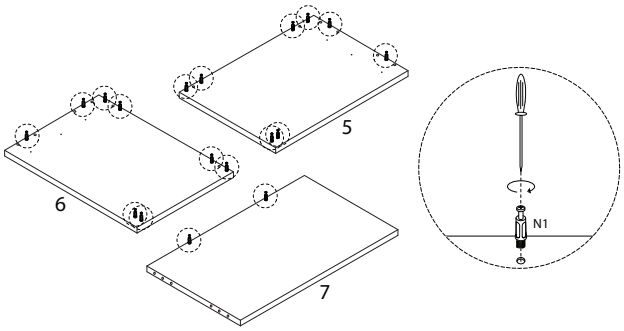

2

9	11	N4
x 1	x 1	x 12

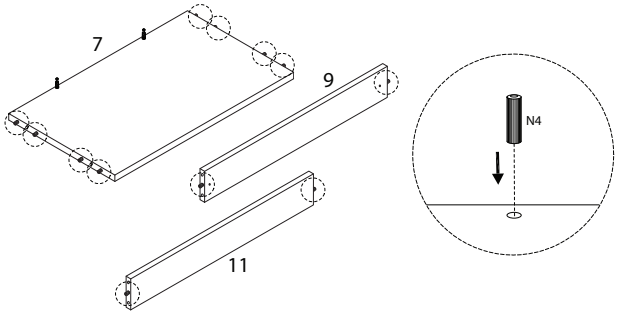

3

11	N2
x 1	x 2

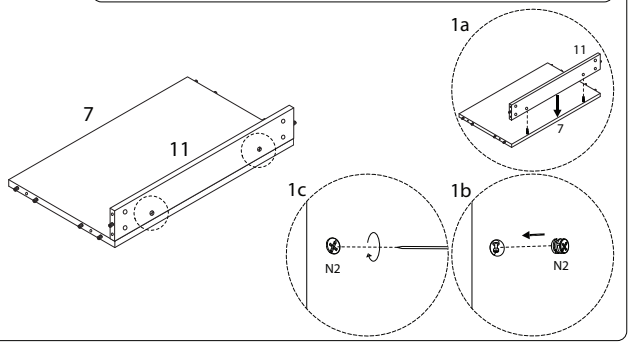

4

12	N2
x 1	x 8

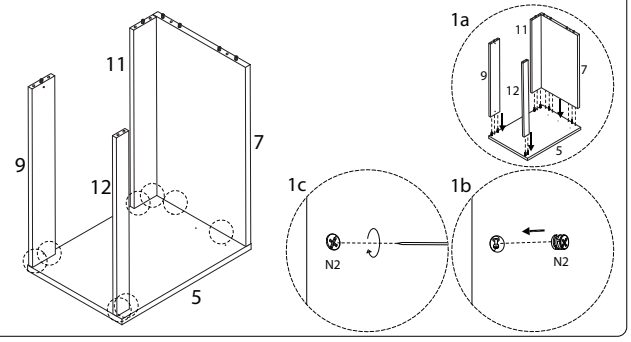

5

N2
x 8

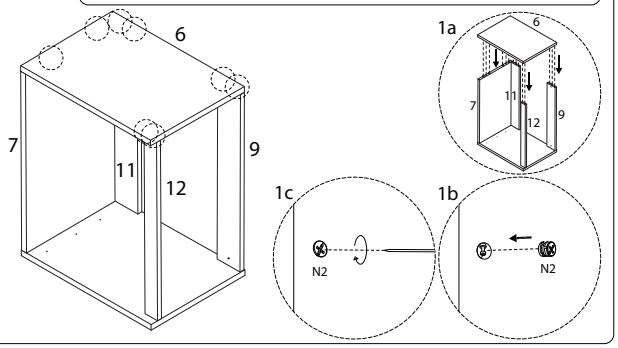

6

N7R	N10
x 1	M4 x 14
	x 3

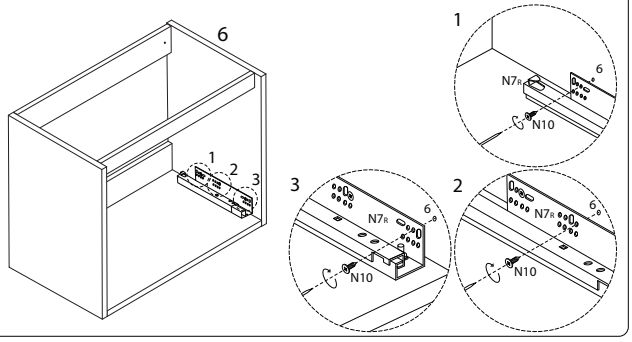

7

N7L	N10
x 1	x 3

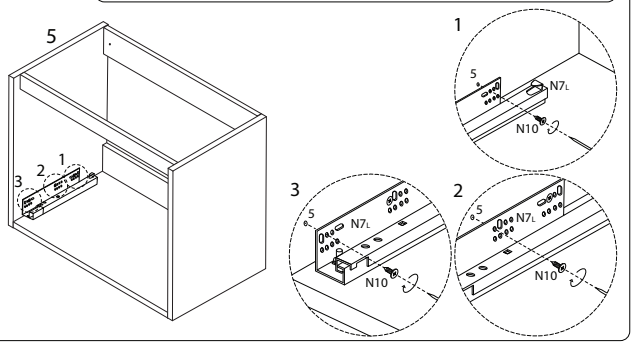

8

16	17	18	20	22	23	N1
x 1	x 1	x 1	x 1	x 1	x 1	x 26

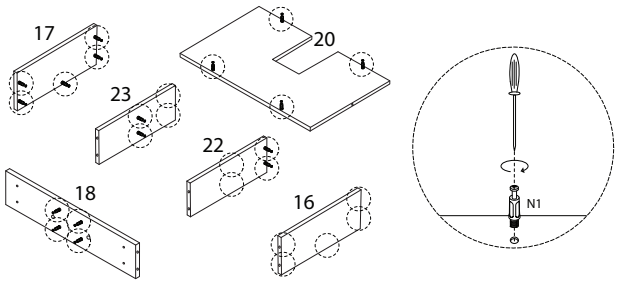

9

19	N2
x 1	x 4

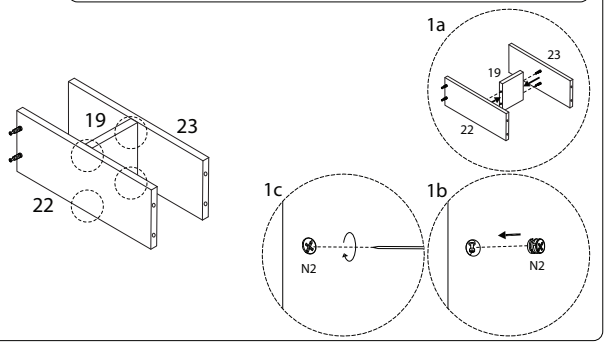

10

10	N2
x 2	x 8

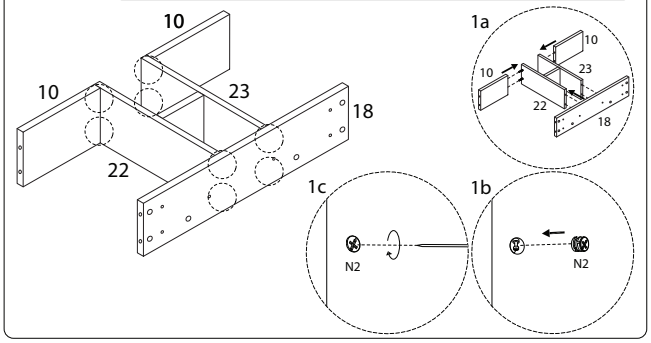

11

N2
x 4

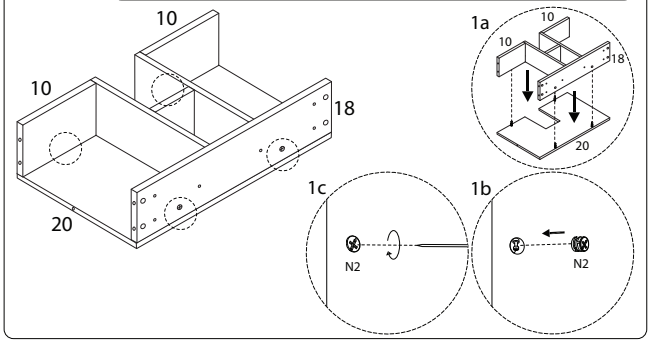

12

N2
x 10

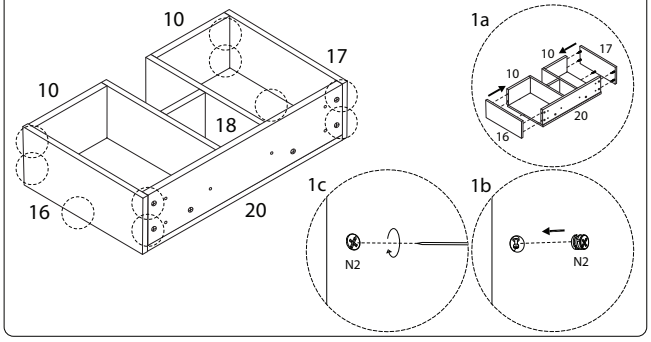

13

15	N12
x 1	x 2

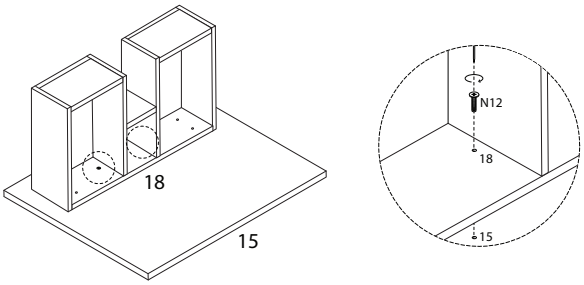

14

N5	N10
x 1	x 2

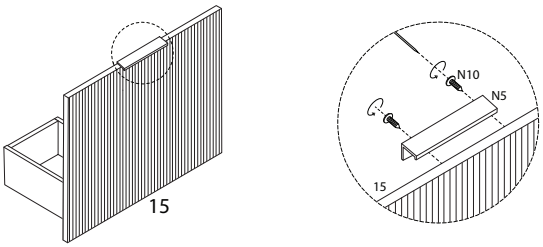

15

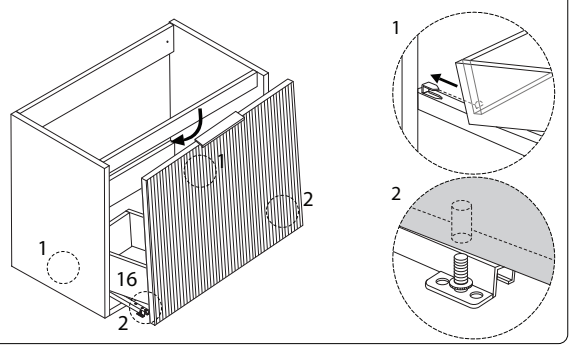

16

N10
M4 x 14
x 2

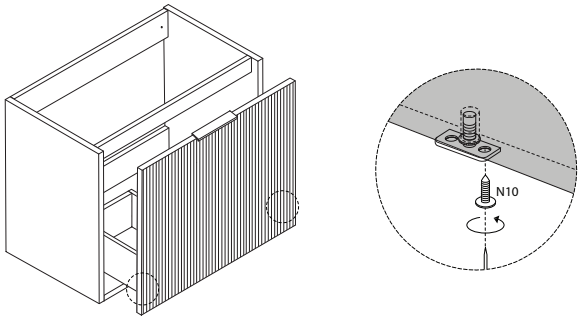

17

N11
M4 x 25
x 4

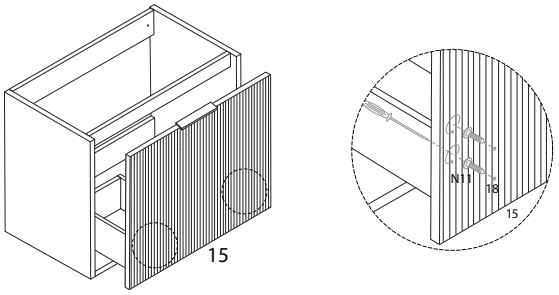

18

N10	N13A
M4 x 14	
x 16	x 2

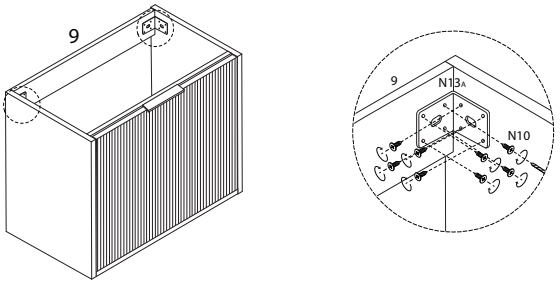

19

N13B	N13C
M6 x 70	
x 2	x 2

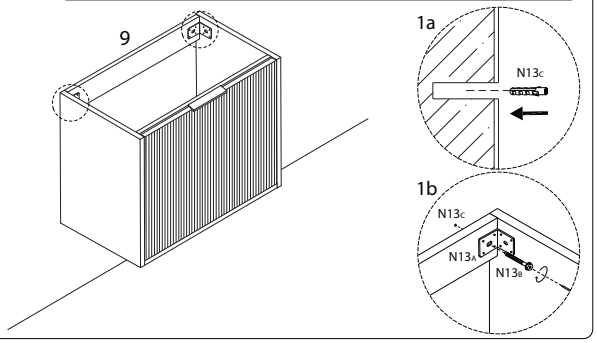

20

1
x 1

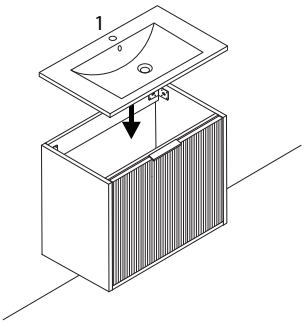

21

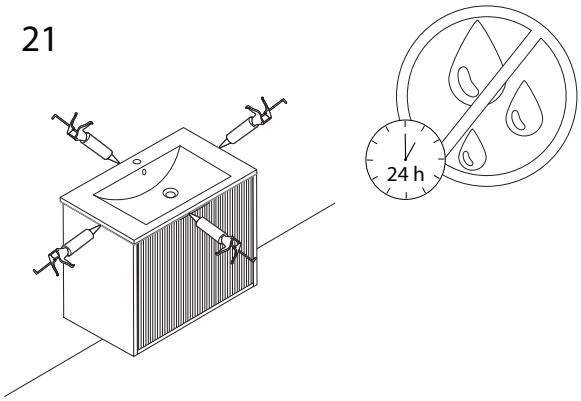
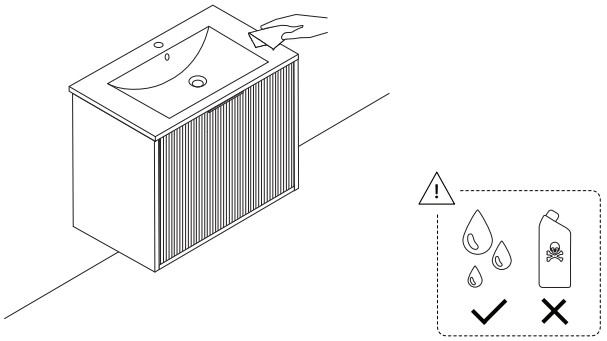
!