LANGFORD

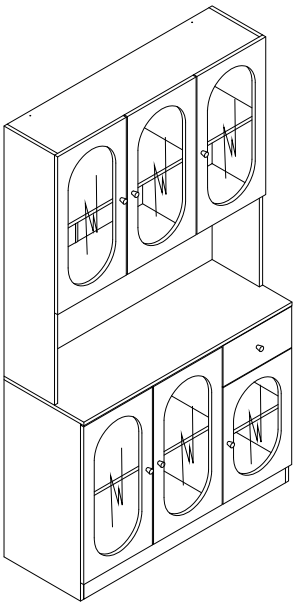

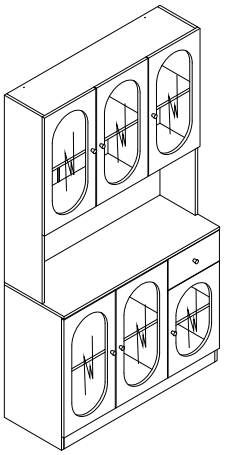

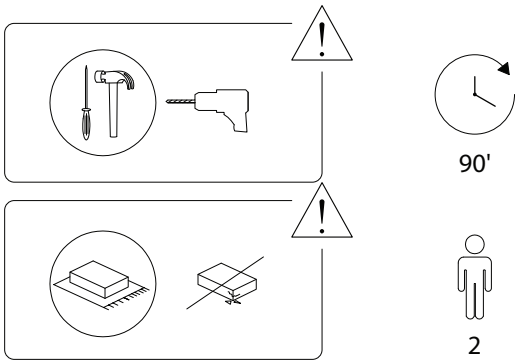
90'
2

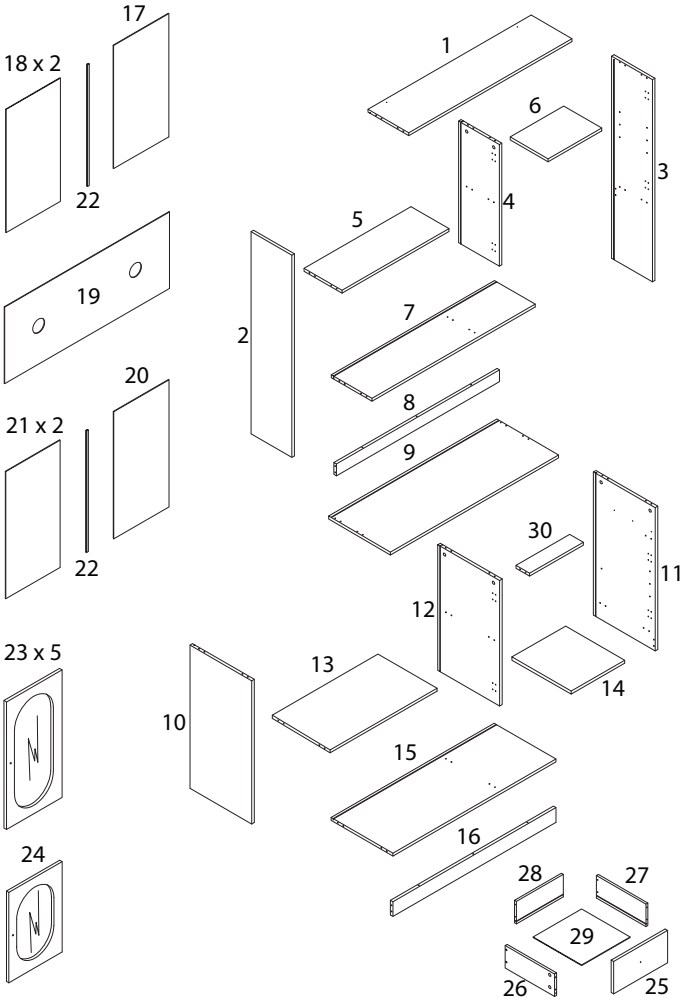
17
18 x 2
22
19
20
21 x 2
22
23 x 5
24
1
6
3
4
5
2
7
8
9
30
11
12
13
14
10
15
16
28
27
29
26
25

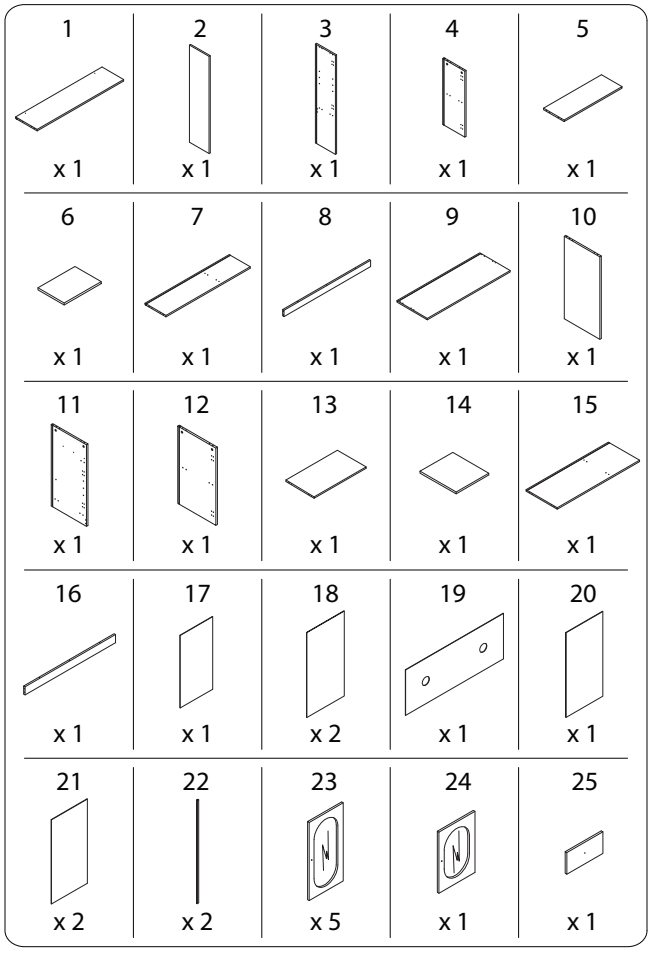
1 x 1
2 x 1
3 x 1
4 x 1
5 x 1
6 x 1
7 x 1
8 x 1
9 x 1
10 x 1
11 x 1
12 x 1
13 x 1
14 x 1
15 x 1
16 x 1
17 x 1
18 x 2
19 x 1
20 x 1
21 x 2
22 x 2
23 x 5
24 x 1
25 x 1

26	27	28	29	30
x 1	x 1	x 1	x 1	x 1
A	B	C	D	E
x 40	x 40	x 46	M4 x 35 x 14	M4 x 12 x 2
F	G	H	I	J
x 2	x 6	M3 x 14 x 24	x 24	M3.5 x 12 x 72
K	L	M	N	O
x 12	x 7	M4 x 16 x 7	x 8	x 2
P	Q1L	Q1R	Q2L	Q2R
M3 x 12 x 12	x 1	x 1	x 1	x 1

1

7	A	C
x 1	x 1	x 2

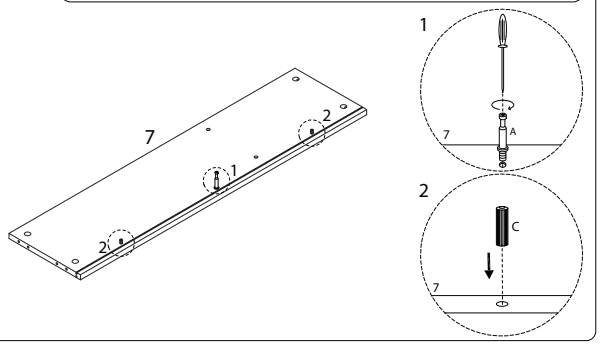

2

8	B
x 1	x 1

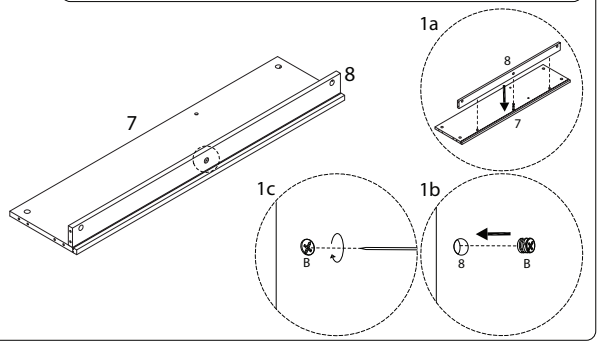

3

1	4	A	C
x 1	x 1	x 4	x 4

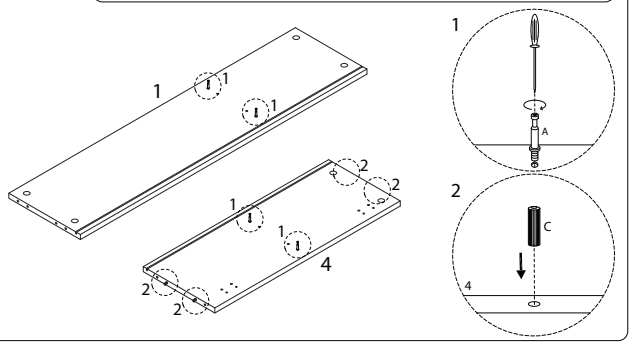

5

D
M4 x 35 x 2

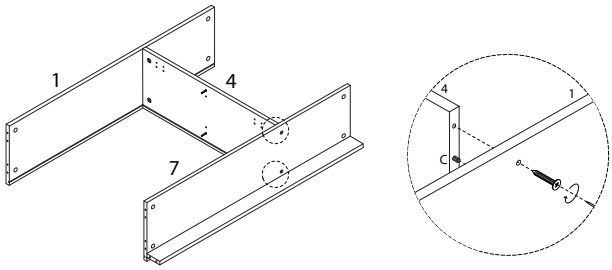

4

B
x 2

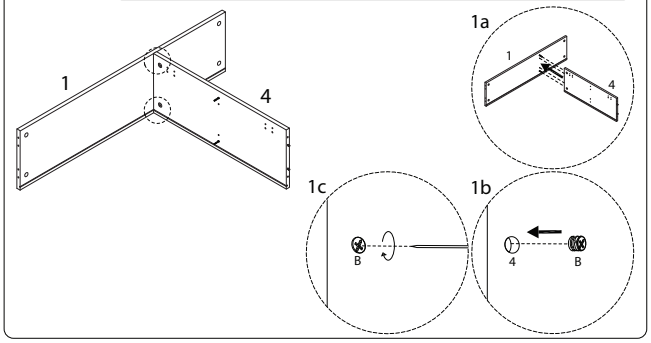

6

2	3	9	A
x 1	x 1	x 1	x 18

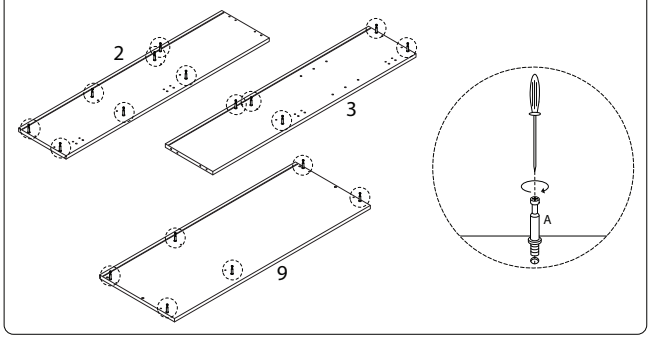

7

17
x 1

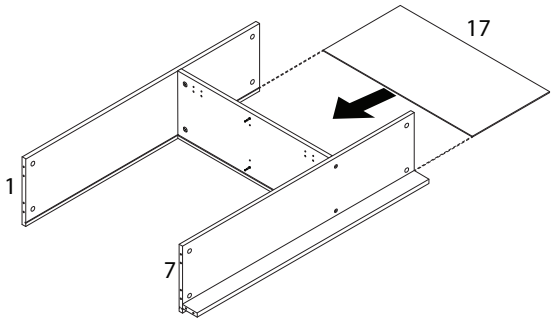

8

C
x 5

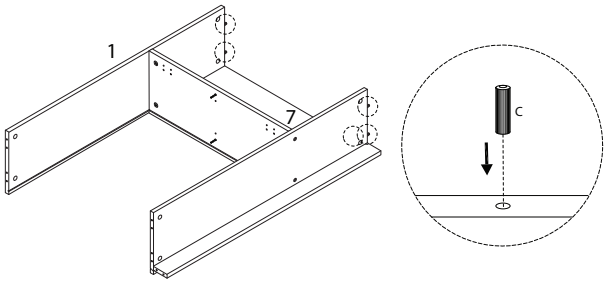

9

B
x 4

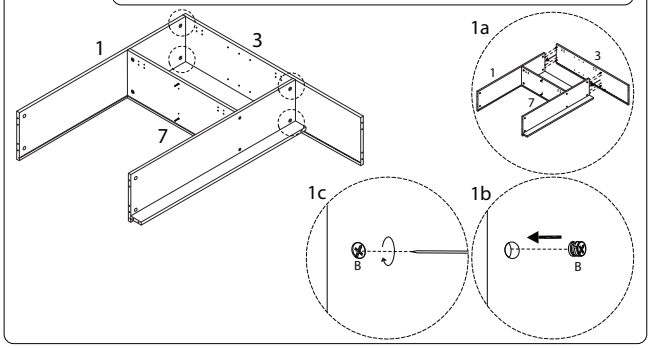

10

5
x 1

C
x 4

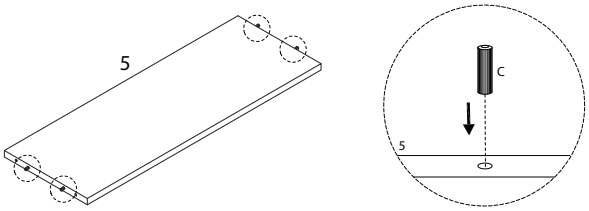

11

B
x 2

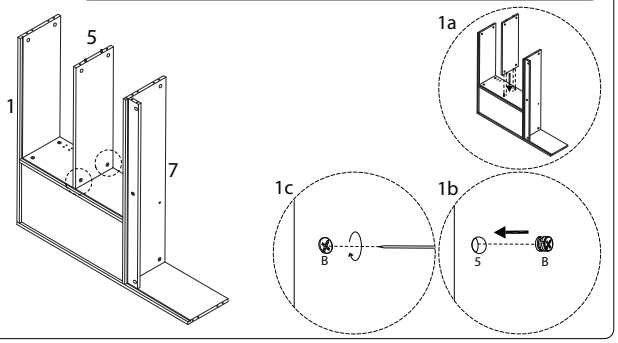

12

C
x 5

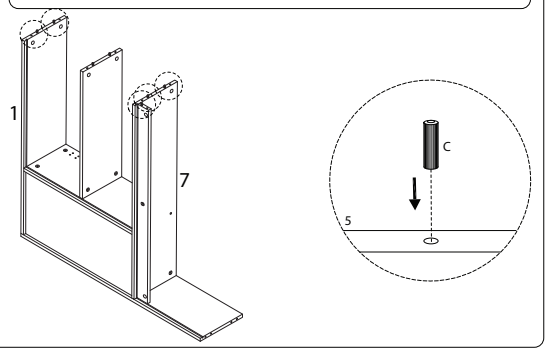

13

18
x 2

22
x 1

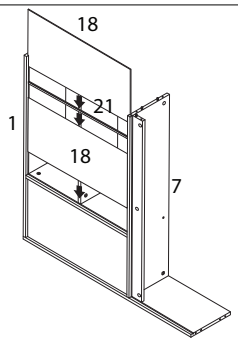

14

B
x 8

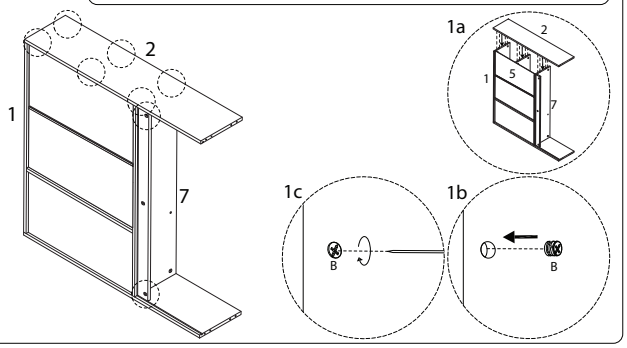

15

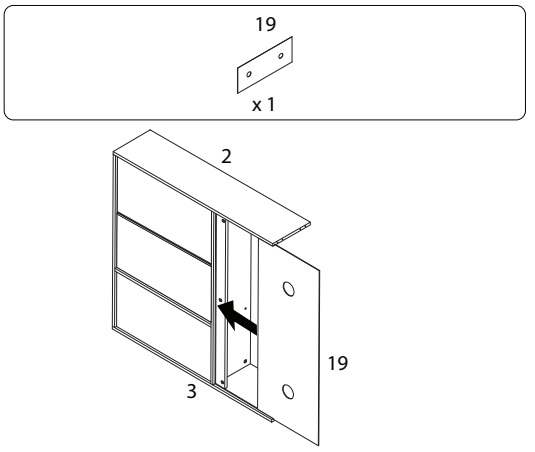

16

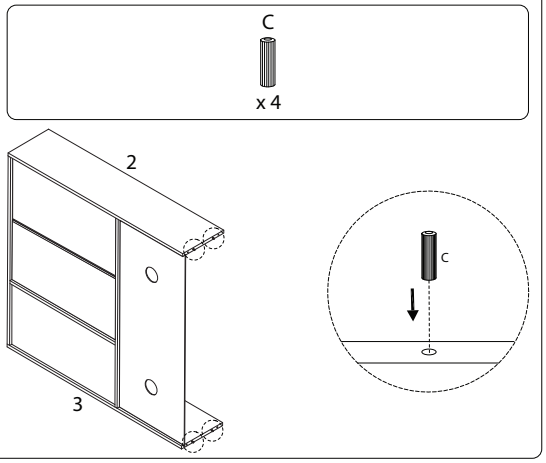

17

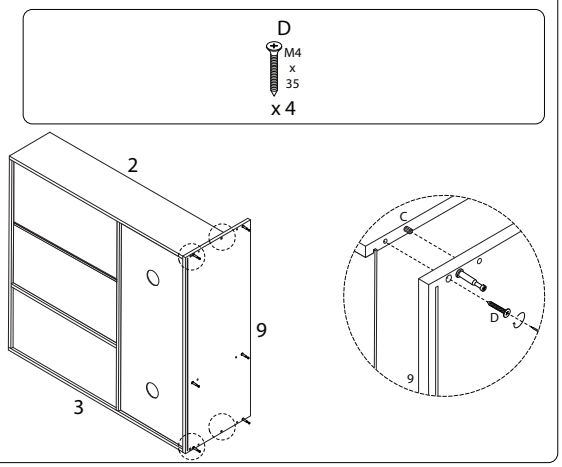

18

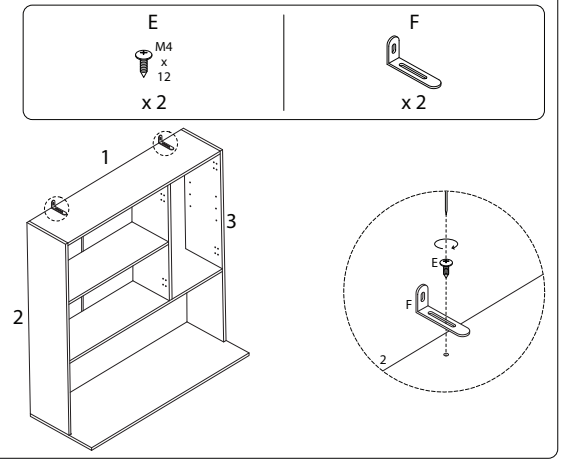

19

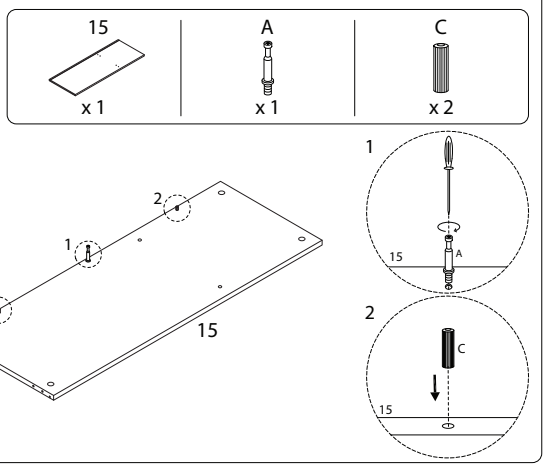

20

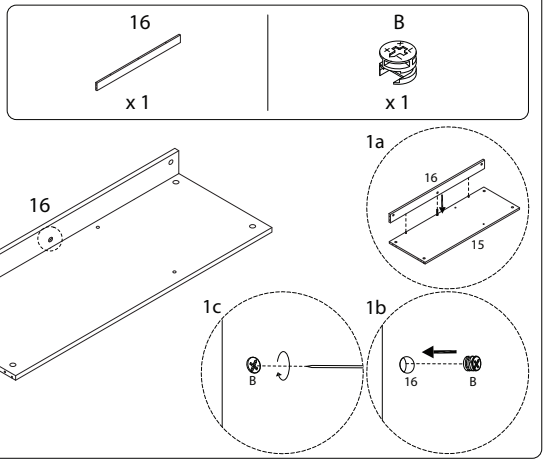

21

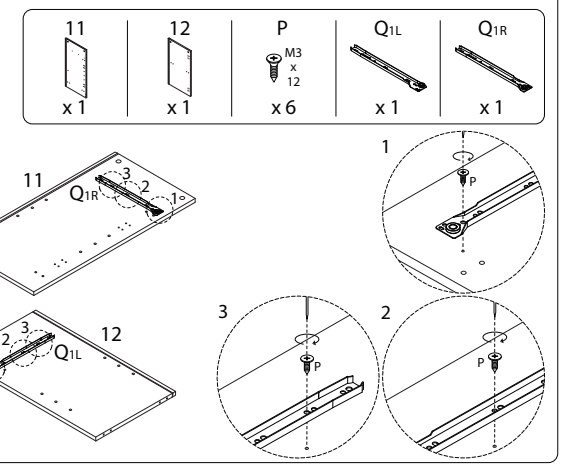

22

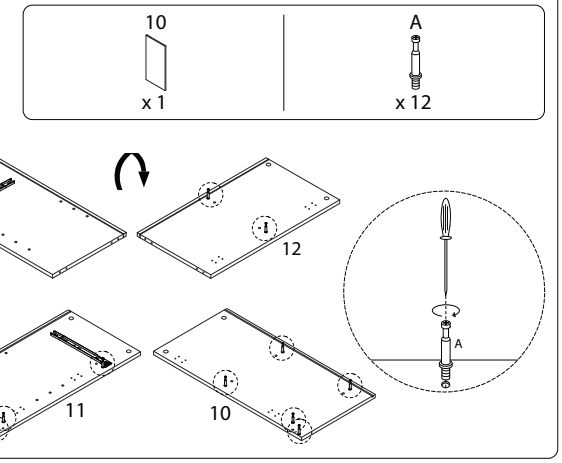

23

13	30	C
x 1	x 1	x 5

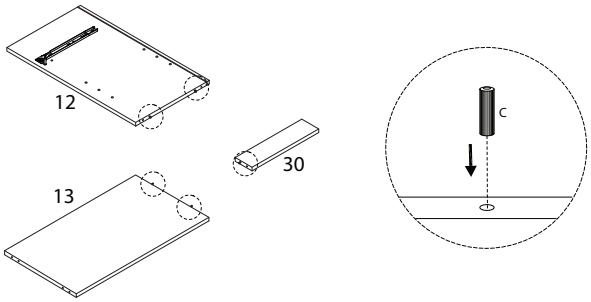

24

D
M4 x 35
x 2

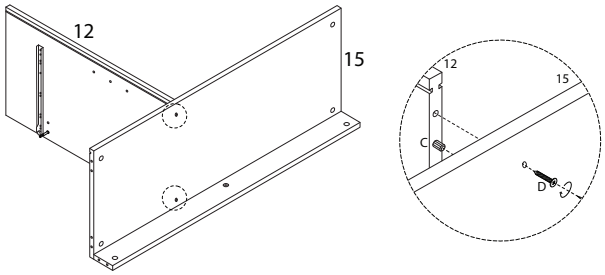

25

B
x 3

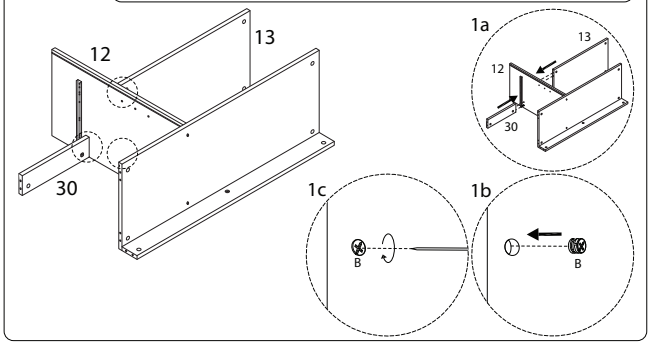

26

C
x 9

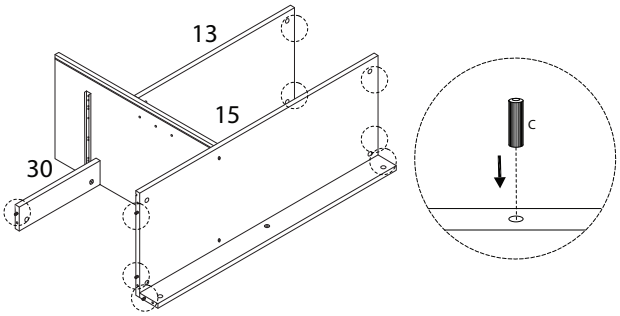

27

B
x 9

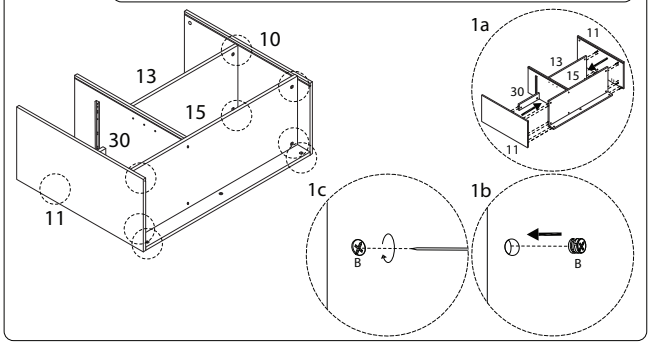

28

G
x 6

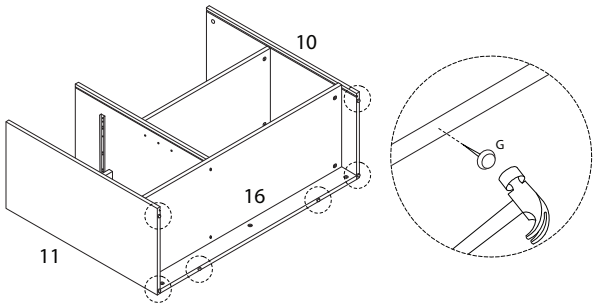

29

20	21	22
x 1	x 2	x 1

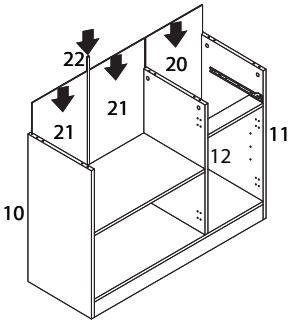

30

C
x 6

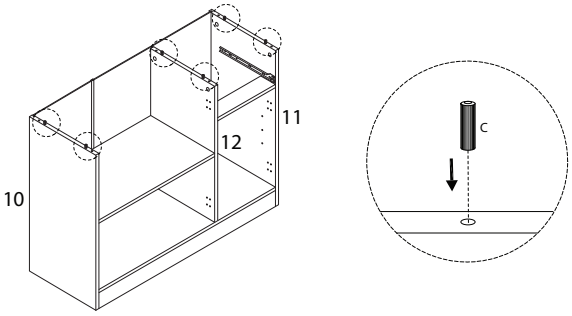

31

B
x 6

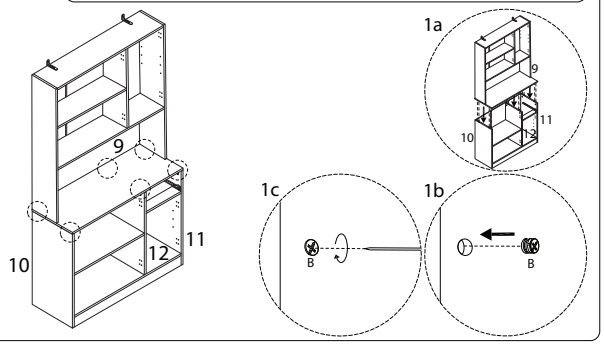

32

H	I
M3 x 14	
x 24	x 24

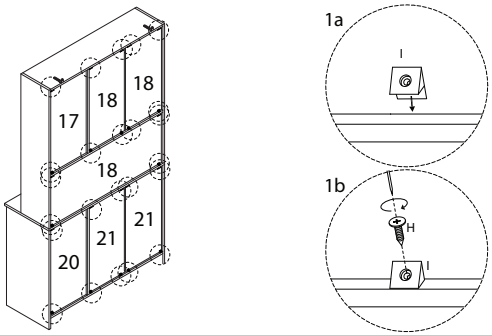

33

D	O
M4 x 35	
x 2	x 2

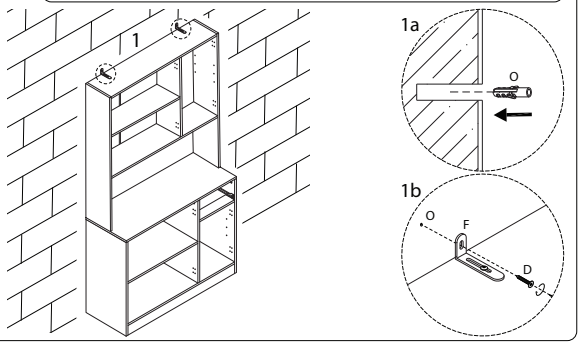

34 x 5

23	J	K	L	M
	M3.5 x 12			M4 x 16
x 1	x 4	x 2	x 1	x 1

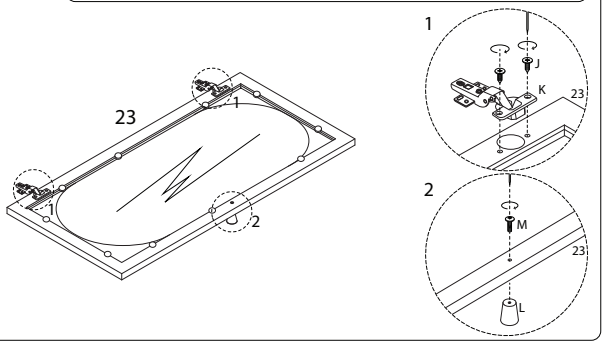

35

24	J	K	L	M
	M3.5 x 12			M4 x 16
x 1	x 4	x 2	x 1	x 1

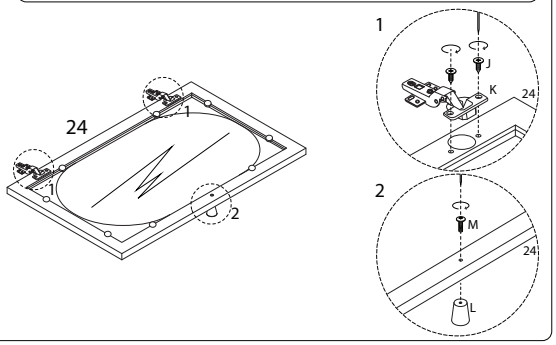

36

J
M3.5 x 12
x 48

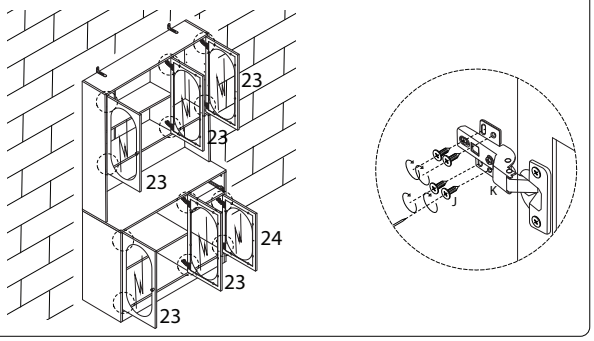

37

N
x 8

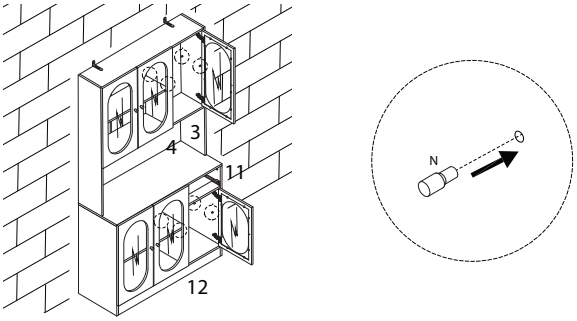

38

6	14
x 1	x 1

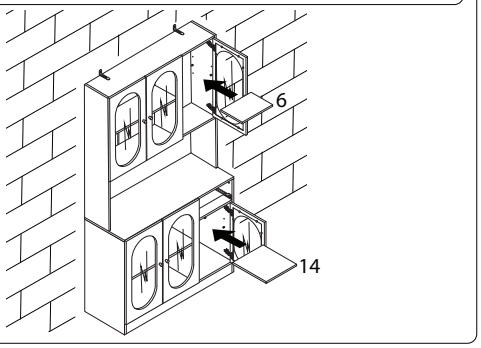

39

25	A	L	M
x 1	x 4	x 1	M4 x 16 x 1

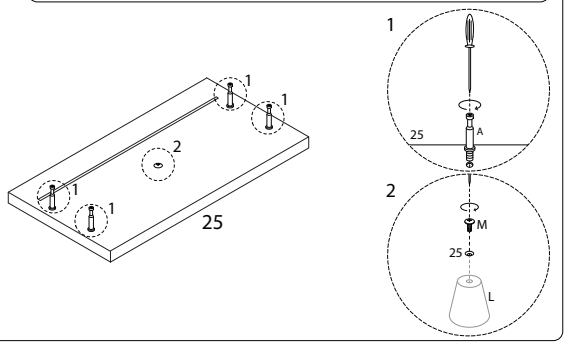

40

26	27	28	D
x 1	x 1	x 1	M4 x 35 x 4

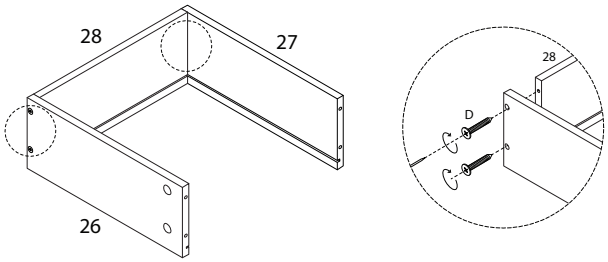

41

29
x 1

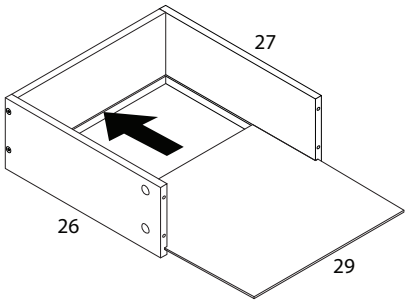

42

B
x 4

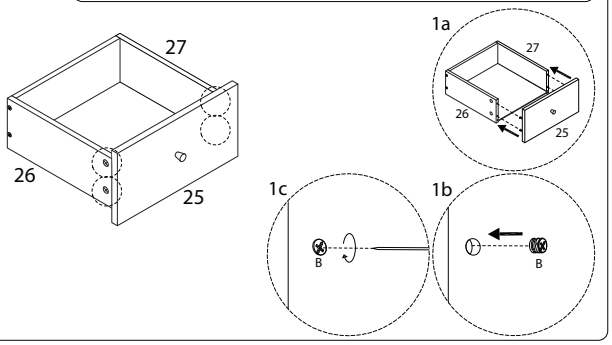

43

P	Q2L	Q2R
M3 x 12 x 6	x 1	x 1

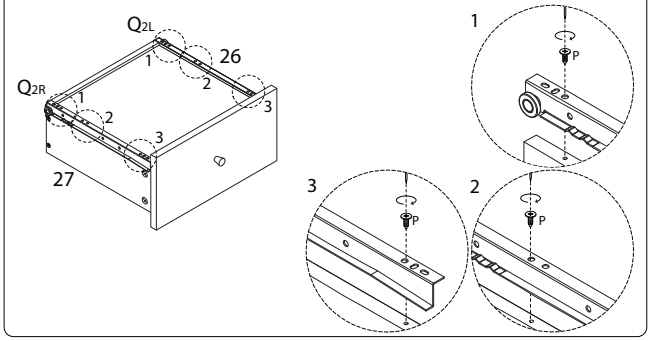

44

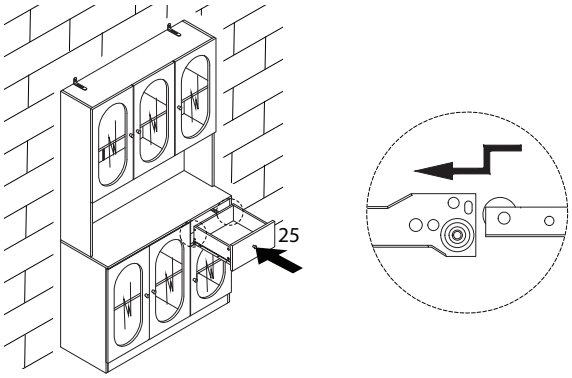
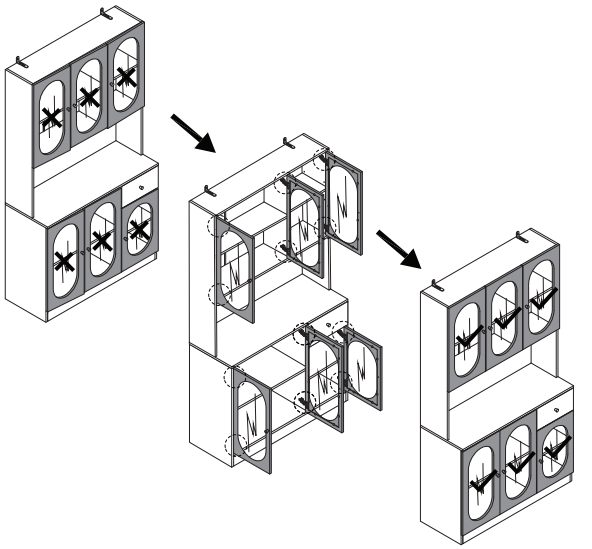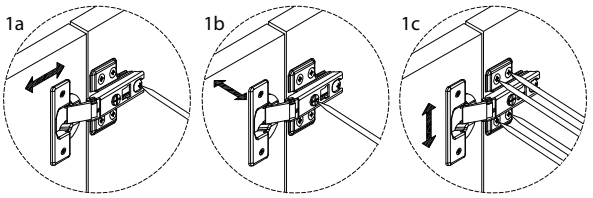
!