ROSELL

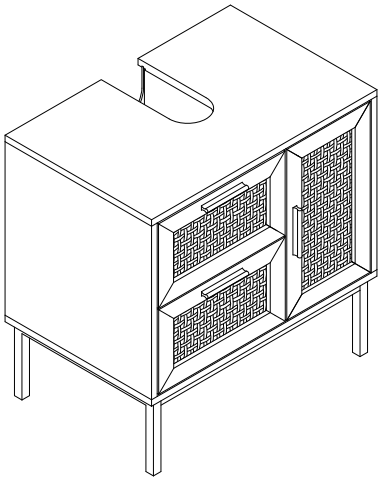

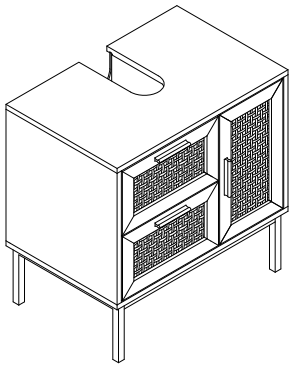

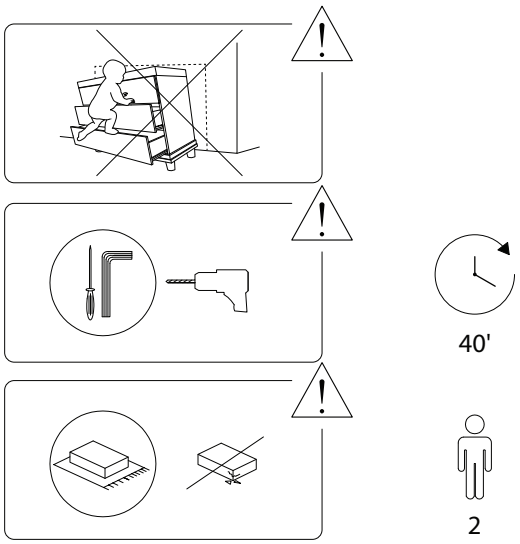
40'
2

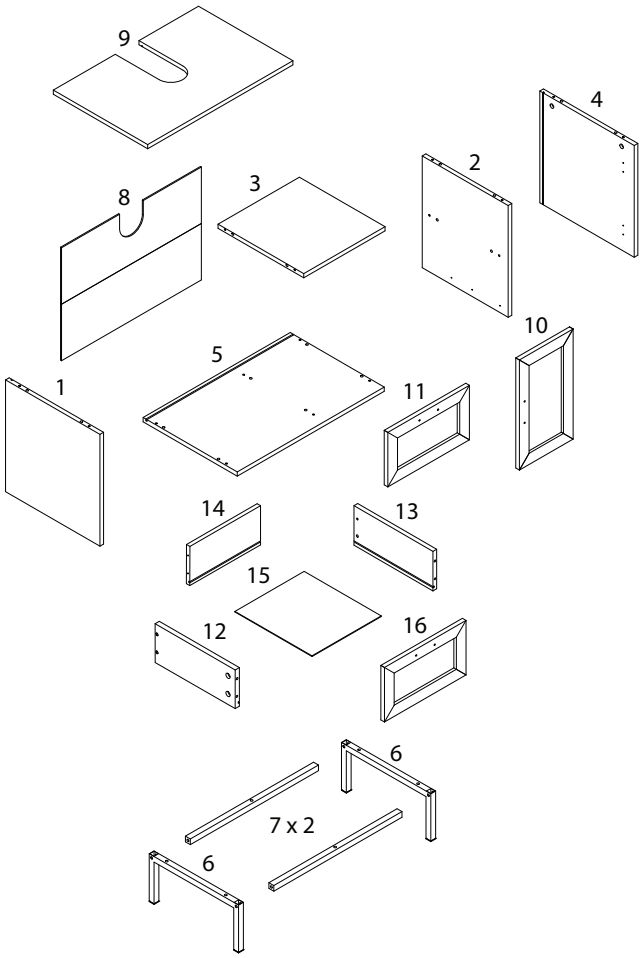
9
4
2
8
3
10
5
1
11
14
13
15
12
16
6
7 x 2
6

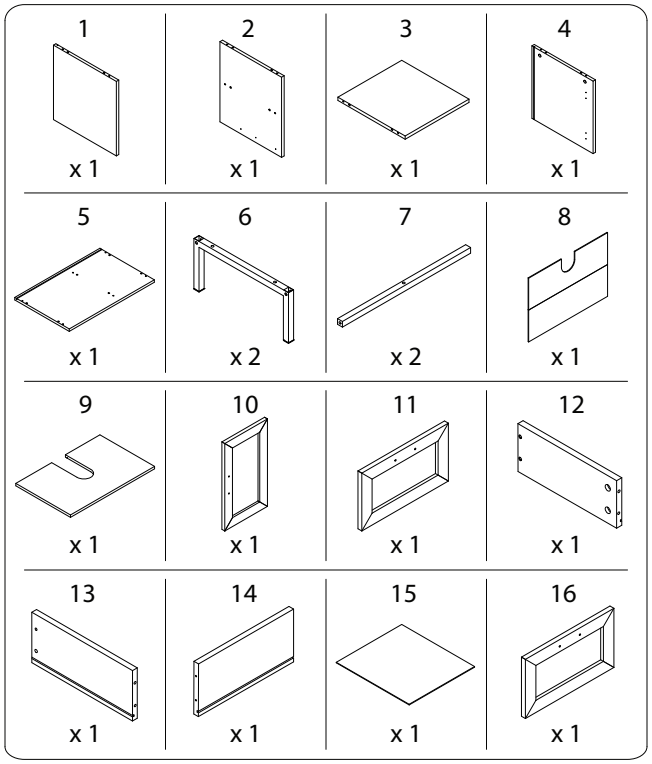
1
x 1
2
x 1
3
x 1
4
x 1
5
x 1
6
x 2
7
x 2
8
x 1
9
x 1
10
x 1
11
x 1
12
x 1
13
x 1
14
x 1
15
x 1
16
x 1

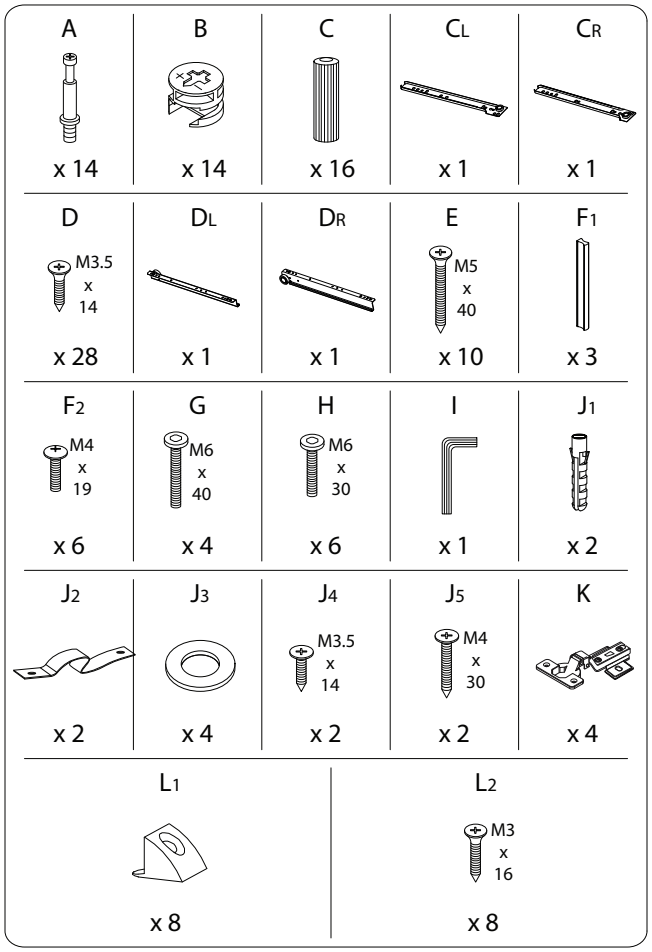
A x 14
B x 14
C x 16
CL x 1
CR x 1
D M3.5 x 14 x 28
DL x 1
DR x 1
E M5 x 40 x 10
F1 x 3
F2 M4 x 19 x 6
G M6 x 40 x 4
H M6 x 30 x 6
I x 1
J1 x 2
J2 x 2
J3 x 4
J4 M3.5 x 14 x 2
J5 M4 x 30 x 2
K x 4
L1 x 8
L2 M3 x 16 x 8

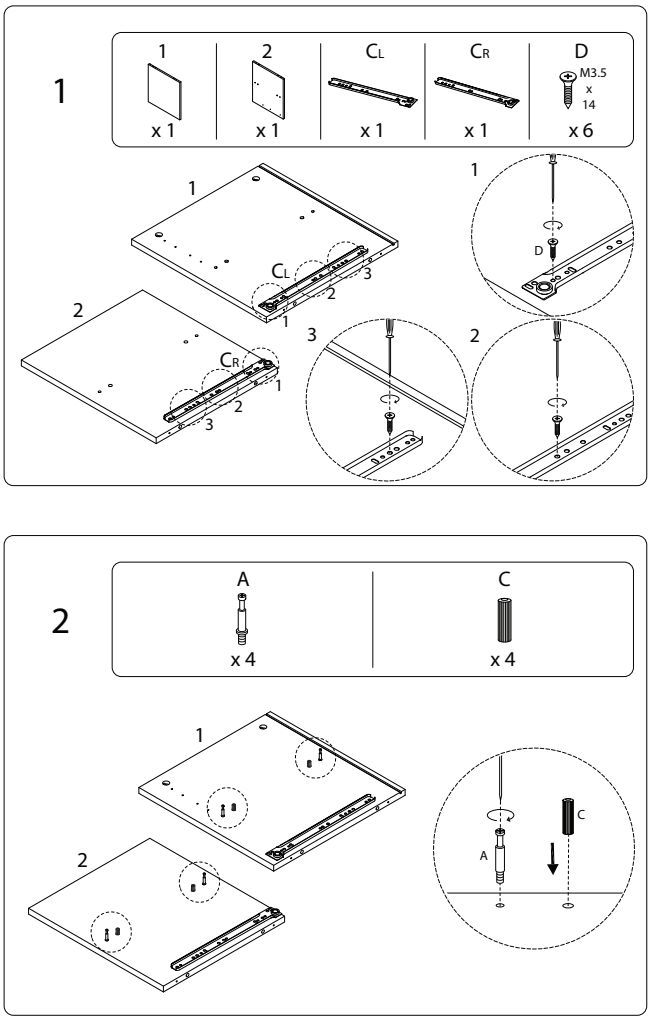
1
1 x 1
2 x 1
CL x 1
CR x 1
D M3.5 x 14 x 6
2
A x 4
C x 4

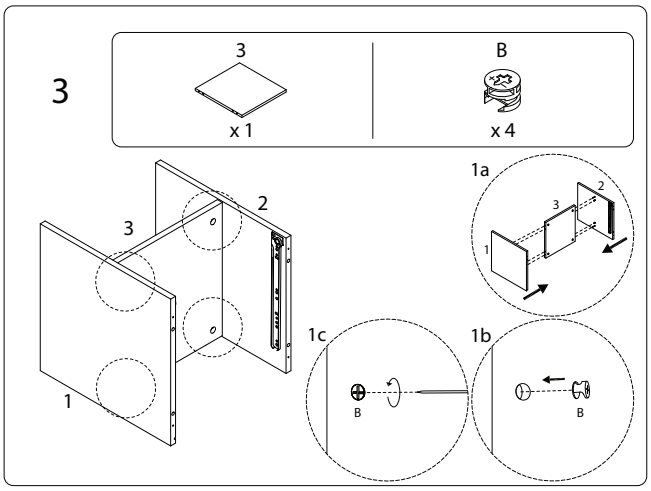
3
3 x 1
B x 4
1a
1c
1b

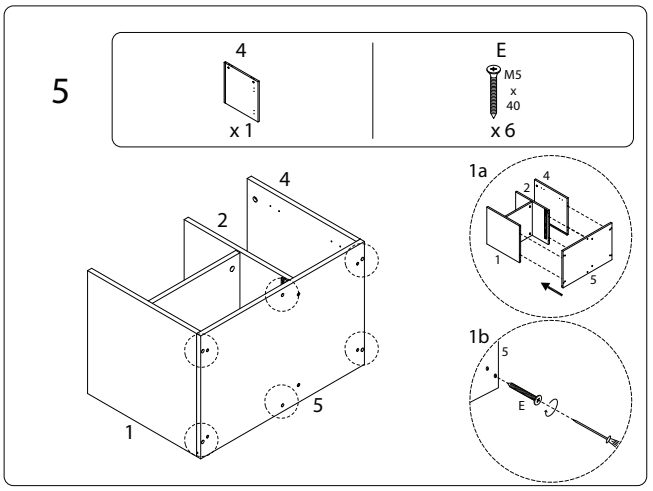
5
4 x 1
E M5 x 40 x 6
1a
1b

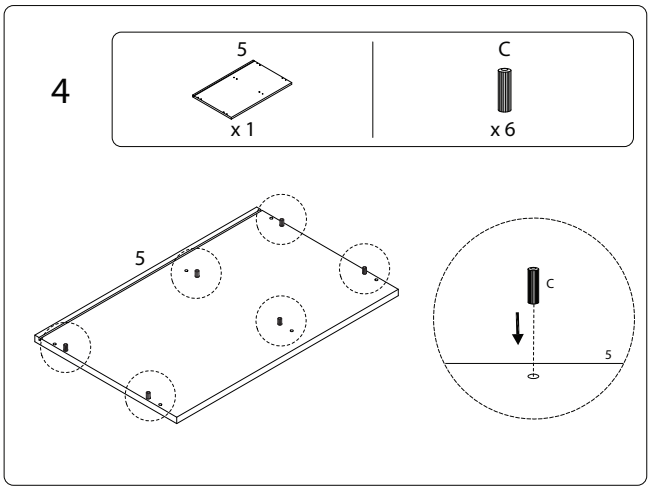
4
5 x 1
C x 6

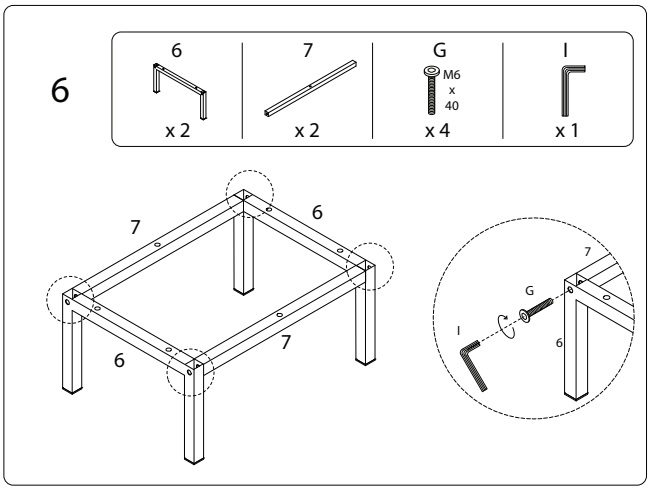
6
6 x 2
7 x 2
G M6 x 40 x 4
I x 1

7

H	I
M6 x 30	
x 6	x 1

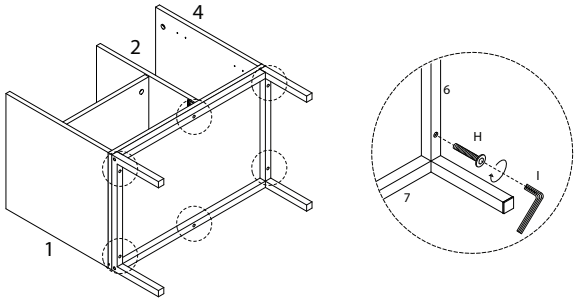

8

8
x 1

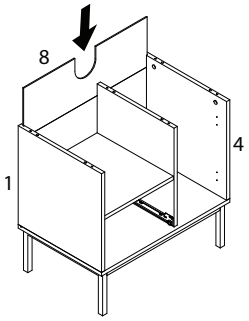

9

9	A	C
x 1	x 6	x 6

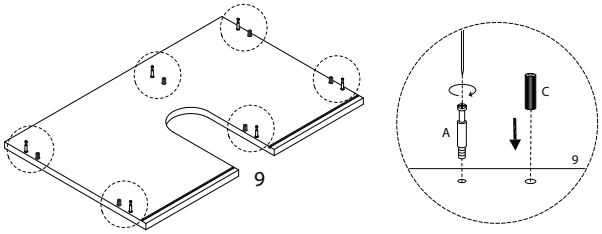

10

B
x 6

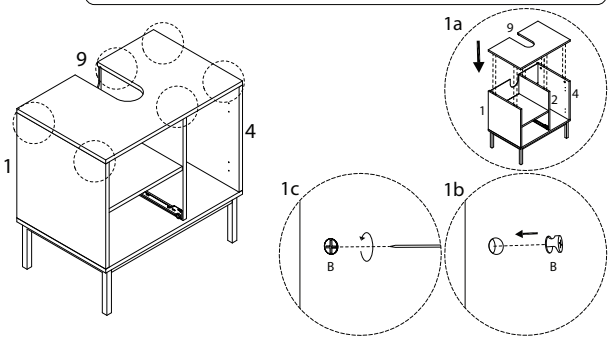

11

L_1	L_2
	M3 x 16
x 8	x 8

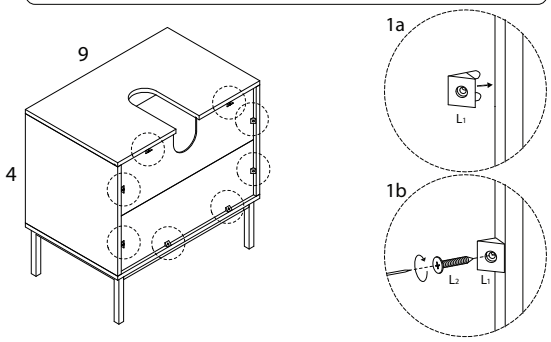

12

10	11	D	K
		M3.5 x 14	
x 1	x 1	x 8	x 4

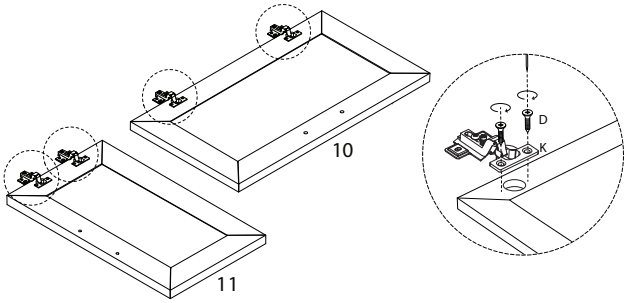

13

F_1	F_2
	M4 x 19
x 2	x 4

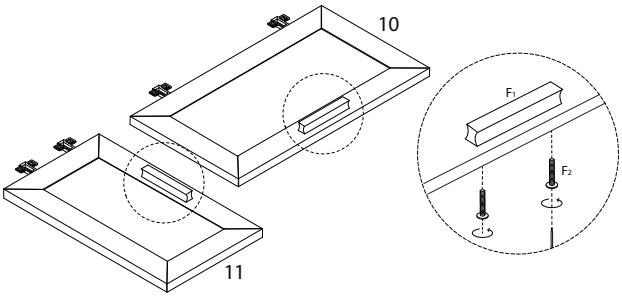

14

D
M3.5 x 14
x 8

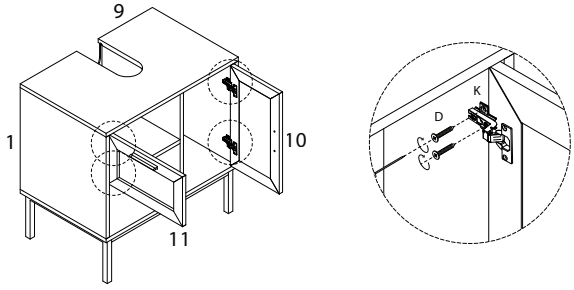

15

12	13	14	E
x 1	x 1	x 1	M5 x 40 x 4

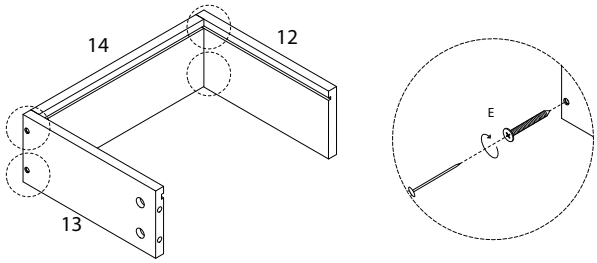

16

15
x 1

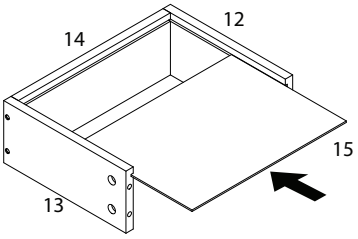

17

16	F_1	F_2
x 1	x 1	M4 x 19 x 2

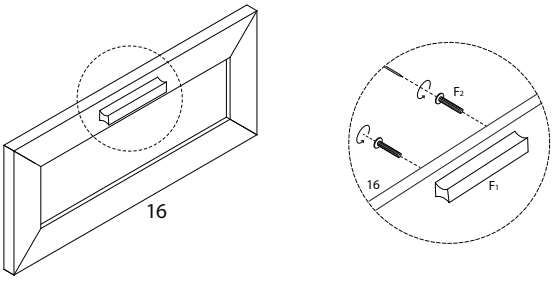

18

A
x 4

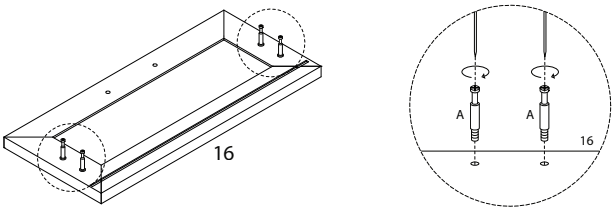

19

B
x 4

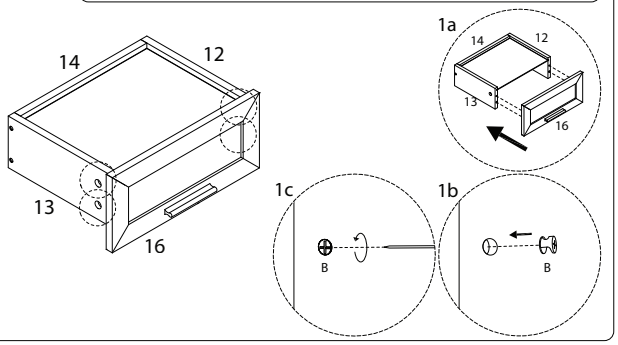

20

D_L	D_R	D
x 1	x 1	M3.5 x 14 x 6

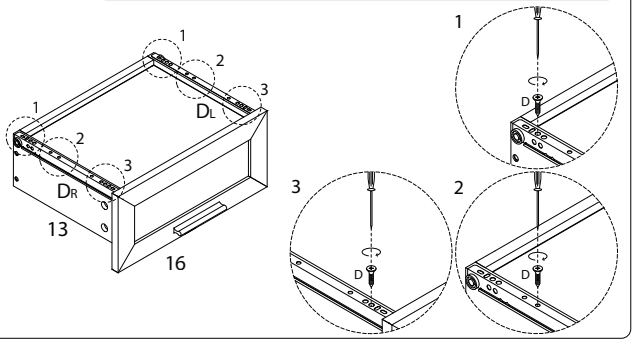

21

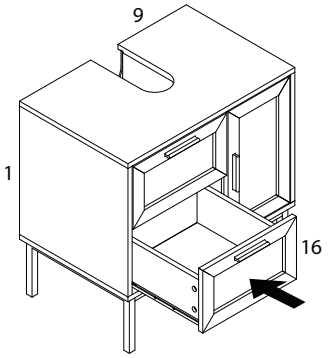

22

J_1	J_2	J_3	J_4	J_5
x 2	x 2	x 4	M3.5 x 14 x 2	M4 x 30 x 2

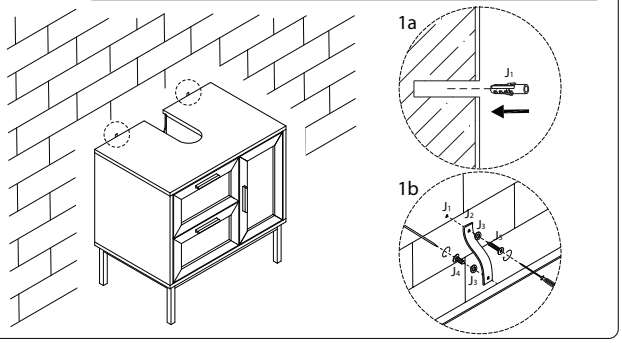

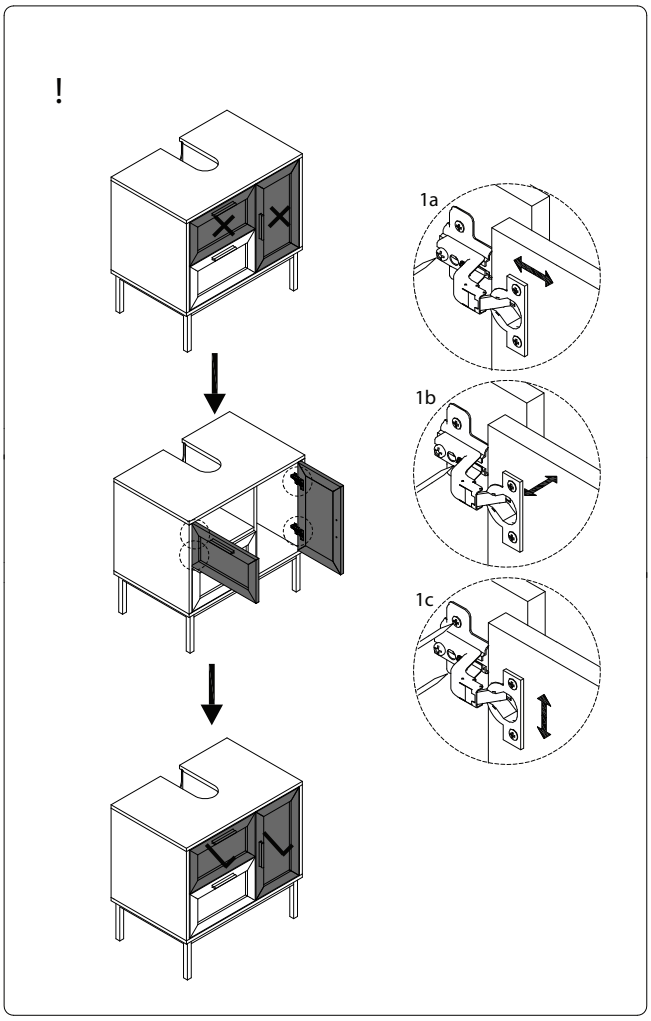

2225/ROSELL/180625/