VEGA

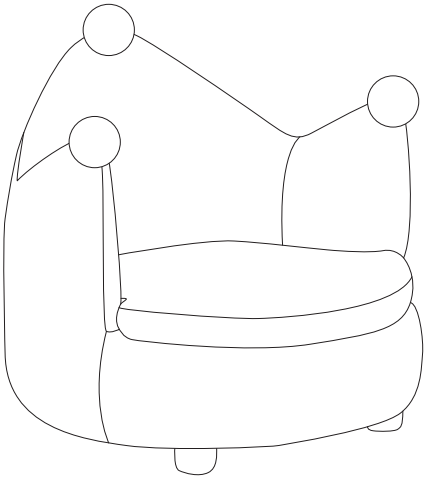

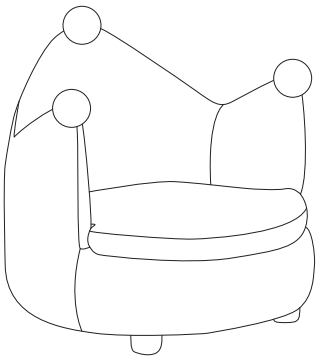

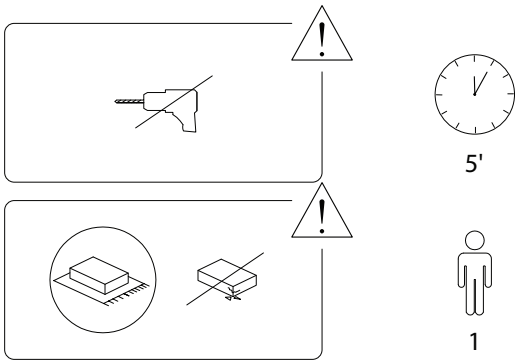

Beliani

Beliani
2100/VEGA/11012024/

A

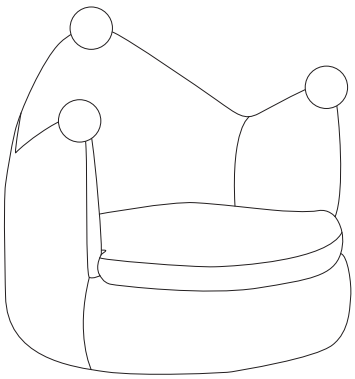

2 x 4

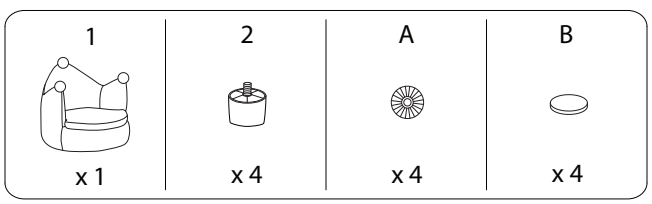

Beliani
2100/VEGA/11012024/

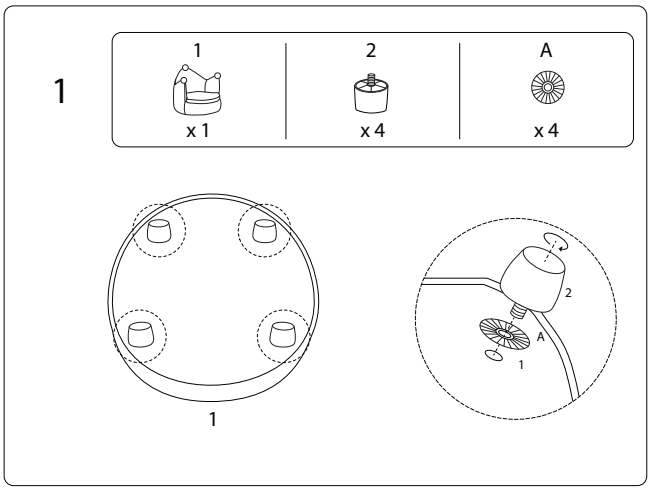

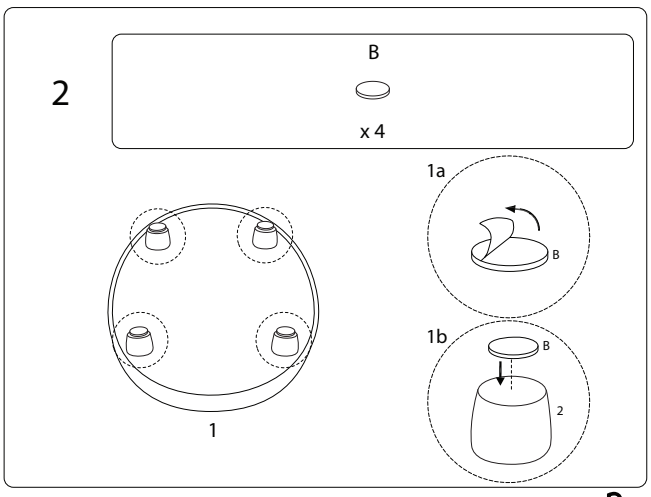

Beliani
2100/VEGA/11012024/