PACLLON

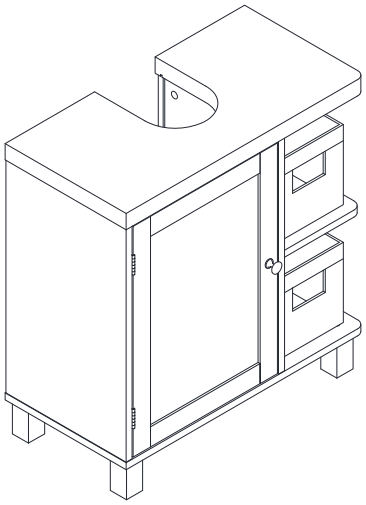

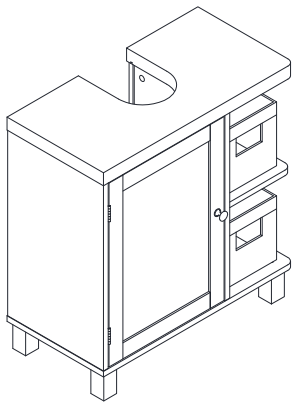

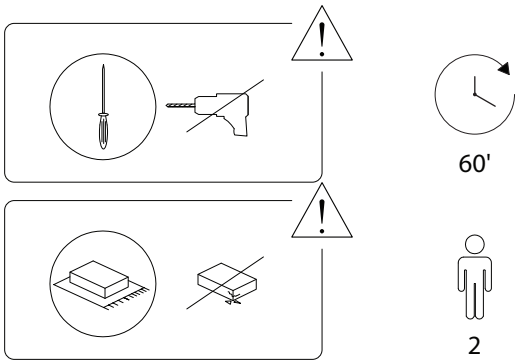

2813/PACLLON/091026/

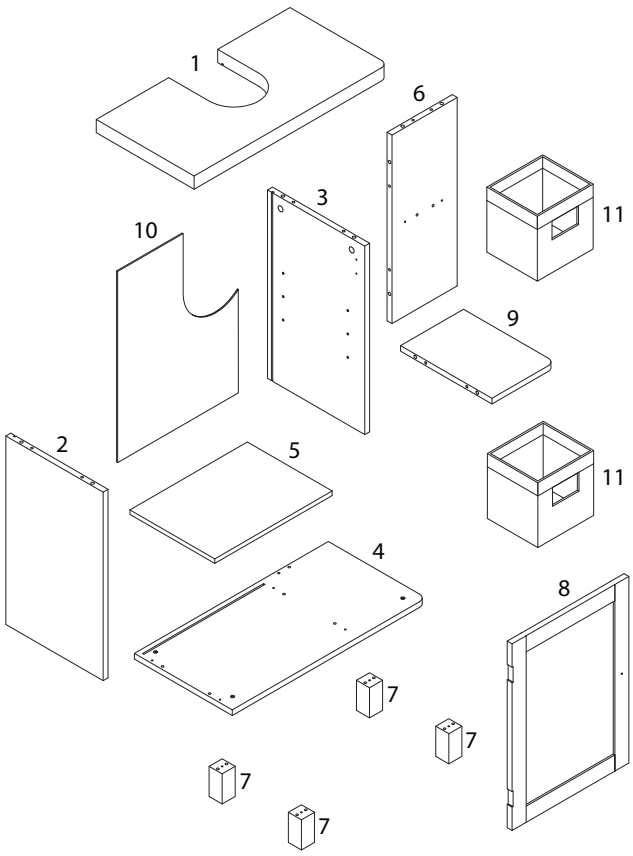

2813/PACLLON/091026/

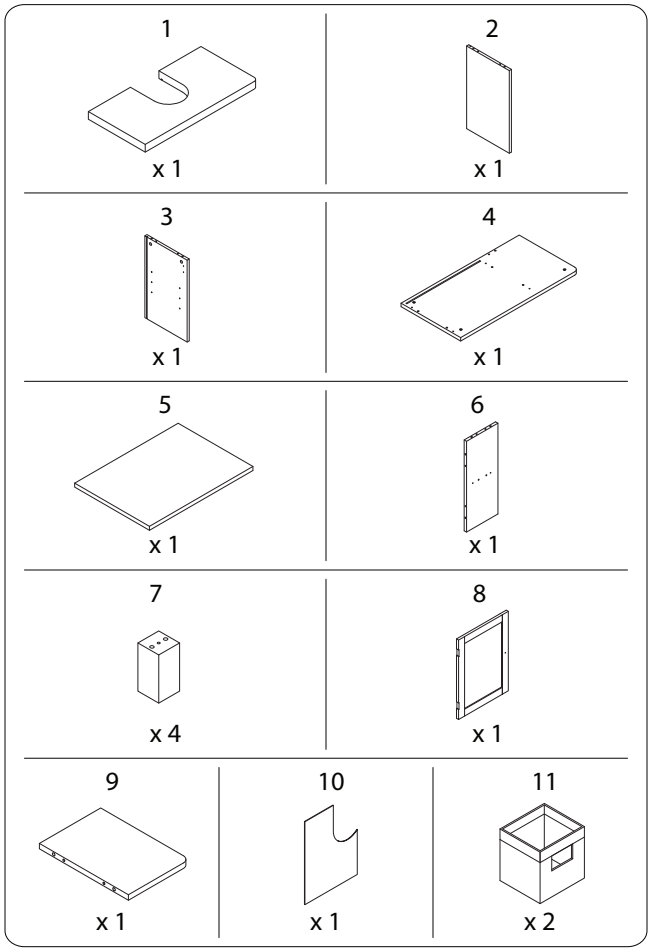

2813/PACLLON/091026/

A	B	C
		
x 26	x 12	x 12
D	**E**	**F**
		
x 1	x 9	x 10
G	**H1**	**H2**
		
x 1	x 4	x 4
I	**J**	**K**
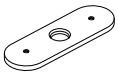	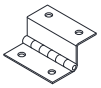	
x 1	x 2	x 4
L	**M**	
		
x 2	x 1	

5/14

2813/PACLLON/091026/

1

1	3	4	B
		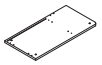	
x 1	x 1	x 1	x 12

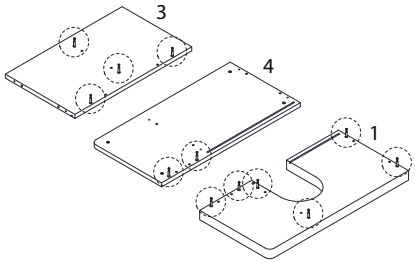

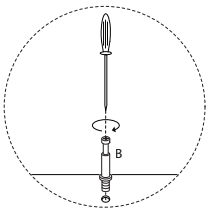

2

9	A
	
x 1	x 2

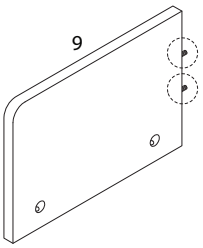

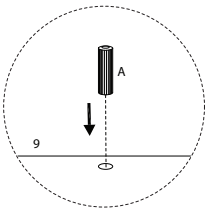

6/14

2813/PACLLON/091026/

3

6	F
	
x 1	x 2

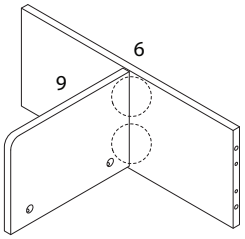

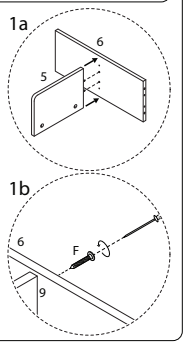

7/14

2813/PACLLON/091026/

4

C

x 4

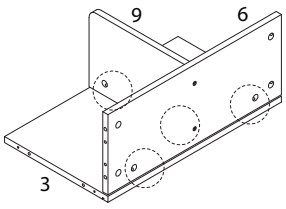

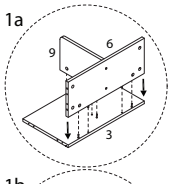

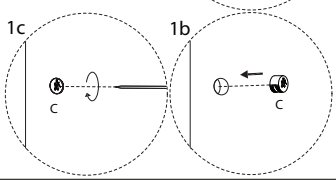

8/14

2813/PACLLON/091026/

5

2	A
	
x 1	x 6

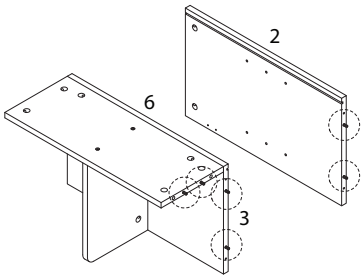

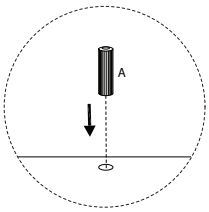

6

C	F
	
x 2	x 4

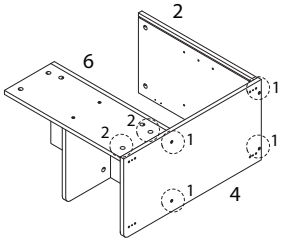

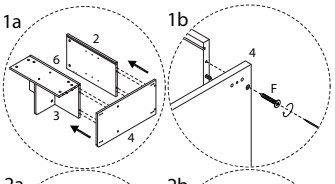

8/14

2813/PACLLON/091026/

7 x 4

7	A
x 1	x 2

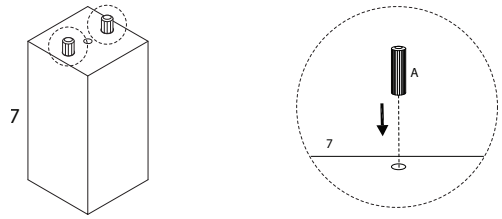

9

10	A
x 1	x 6

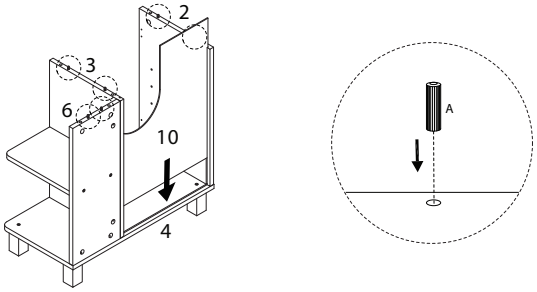

8

F
M4 x 35
x 4

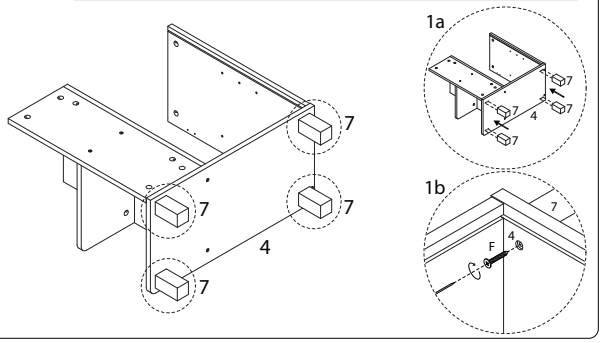

10

C
x 6

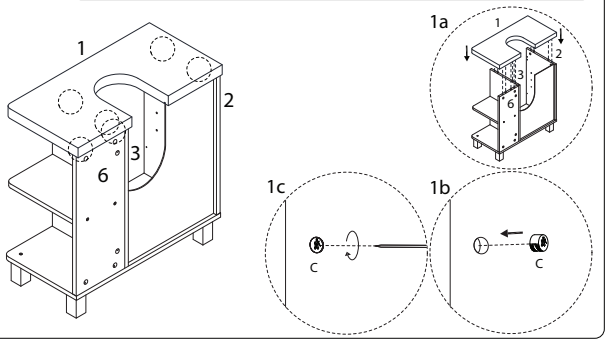

11

8	E	I	J
x 1	x 5	x 1	x 2

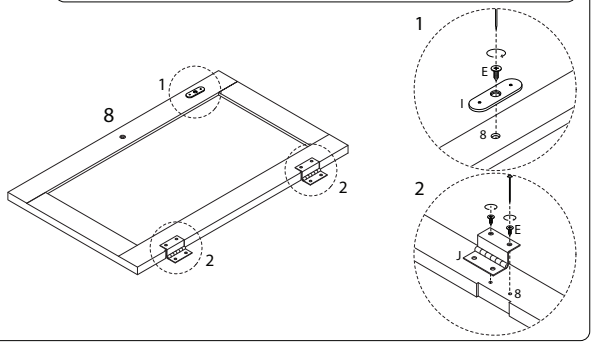

13

E
M3 x 12
x 4

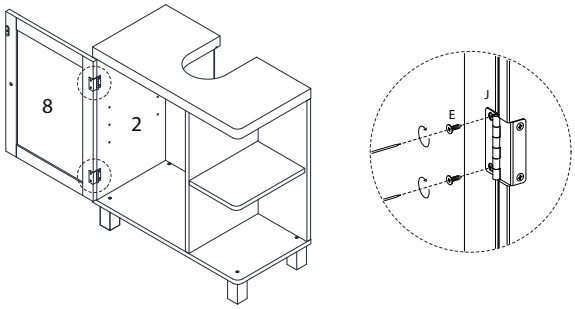

12

D	G
x 1	M4 x 16
	x 1

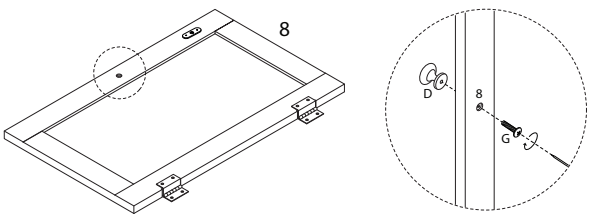

14

L	M
M3 x 14	
x 2	x 1

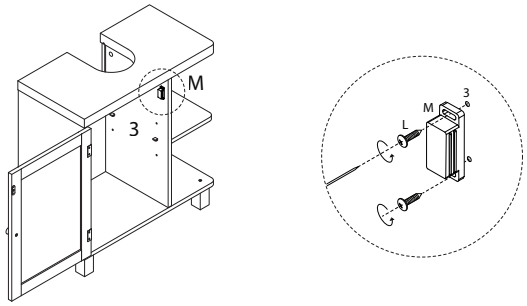

15

K

x 4

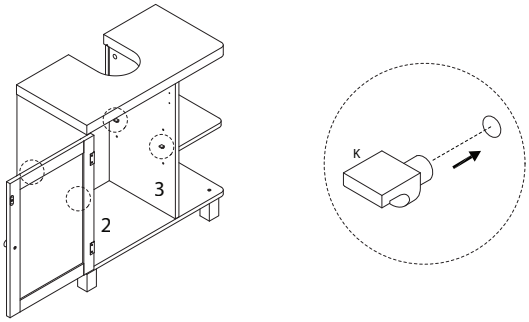

16

5

x 1

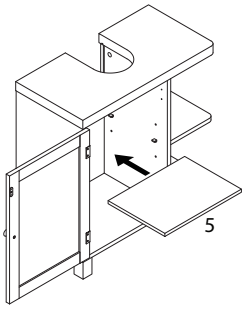

2813/PACLLON/091026/

17

H1

x 4

H2

M3 x 14

x 4

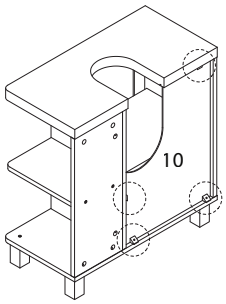

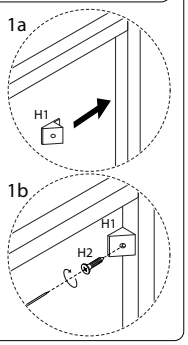

18

11

x 2

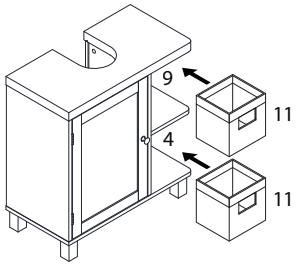

2813/PACLLON/091026/