BERBICE

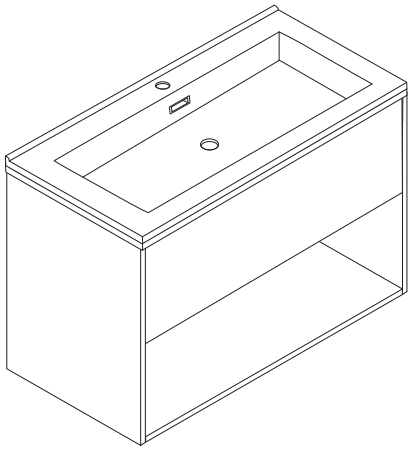

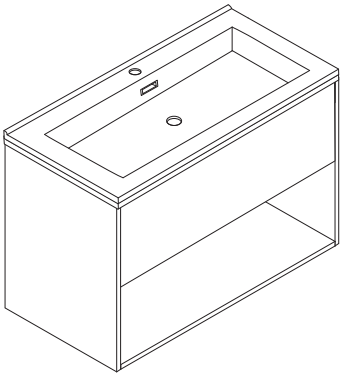

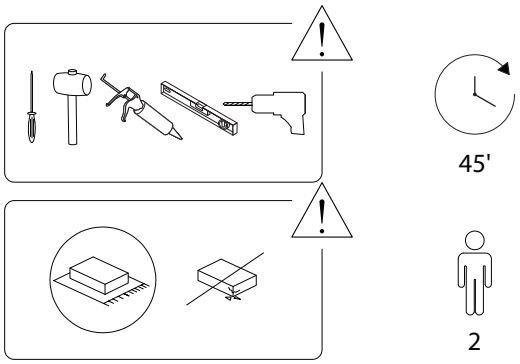

1/17

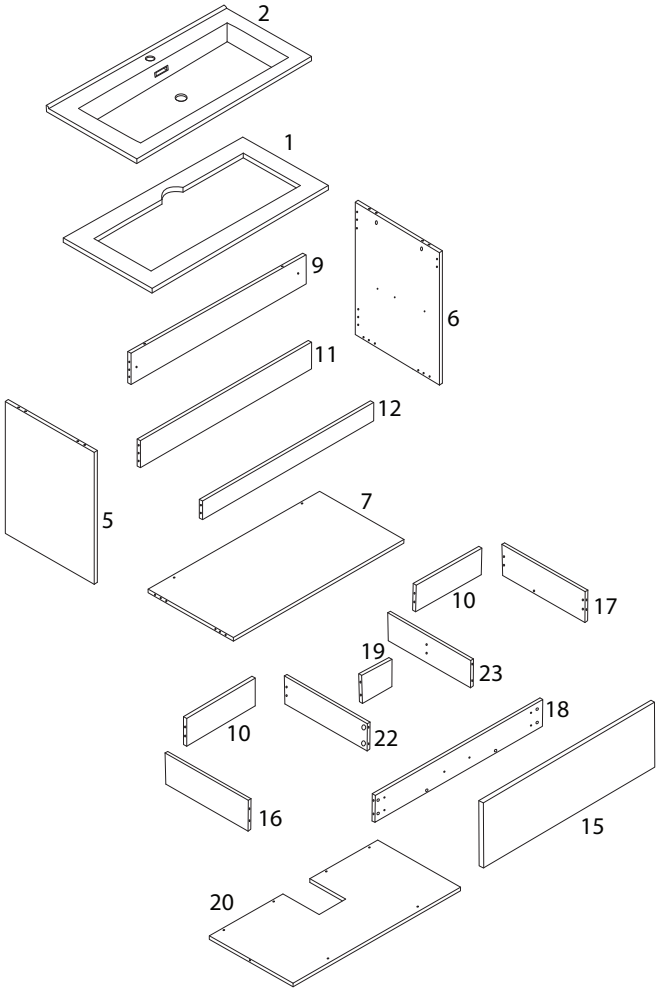

2/17

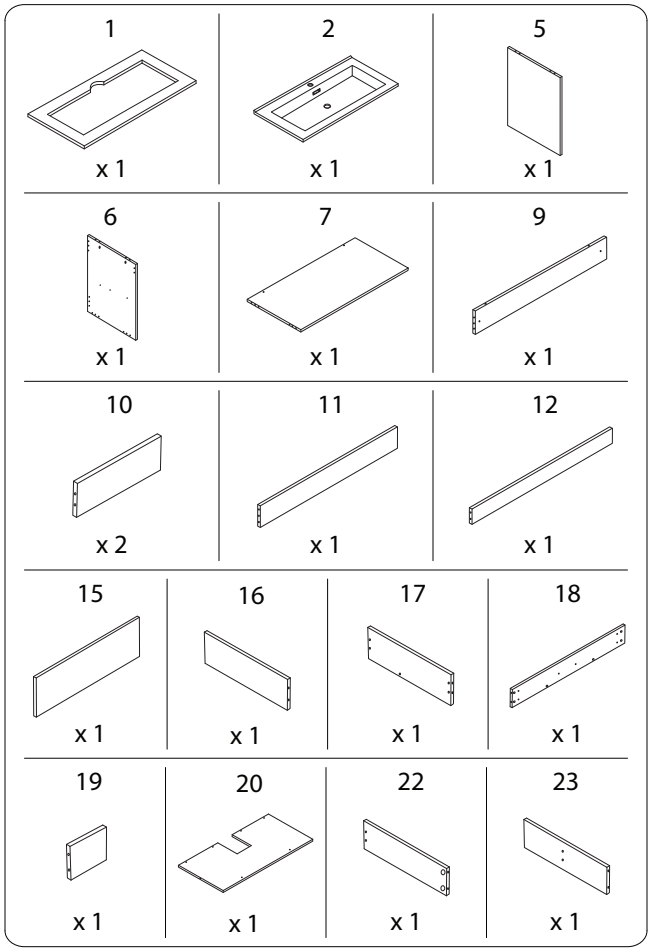

3/17

N1	N2
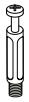	
x 54	x 54
N4	**N7L**
	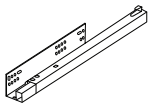
x 16	x 1
N7R	**N10**
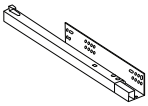	
x 1	x 24
N11	**N12**
	
x 4	x 2
N13₁	**N13₂**	**N13₃**
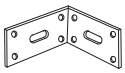	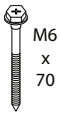	
x 2	x 2	x 2

1

1	5	6	7	9	11	N1	N4
x 1	x 1	x 1	x 1	x 1	x 1	x 26	x 16

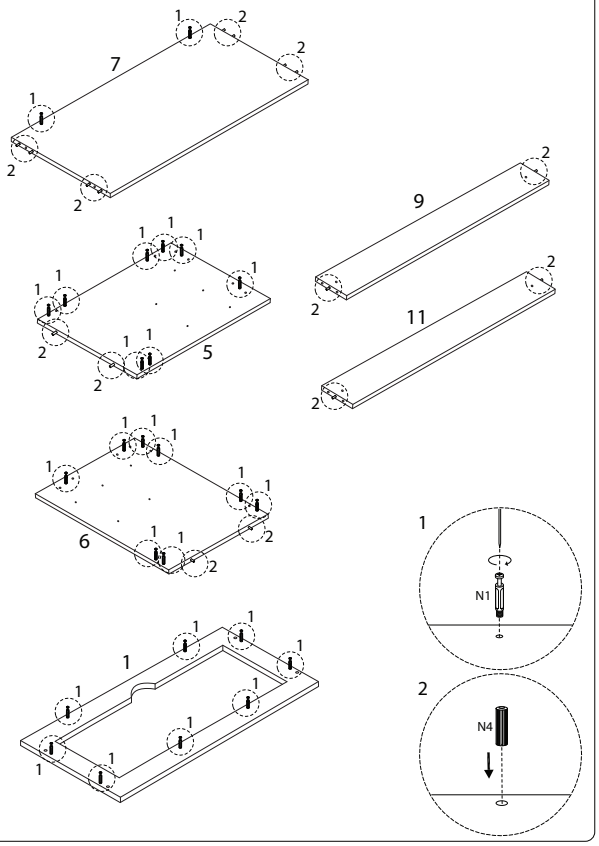

2

16	17	18	20	22	23	N1
x 1	x 1	x 1	x 1	x 1	x 1	x 28

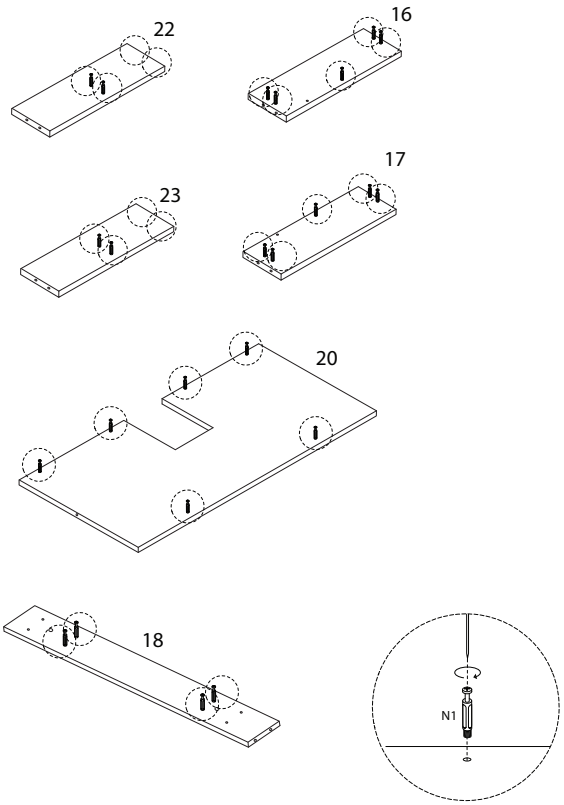

3

N2

x 2

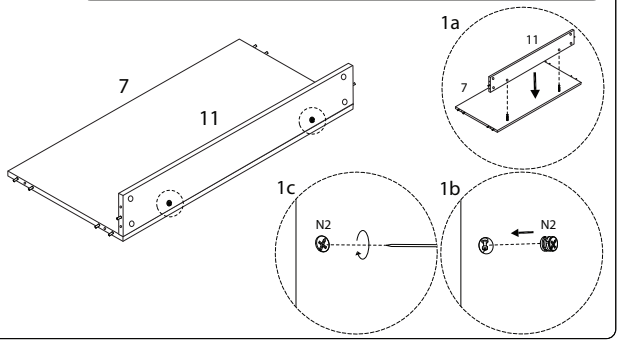

4

N2

x 6

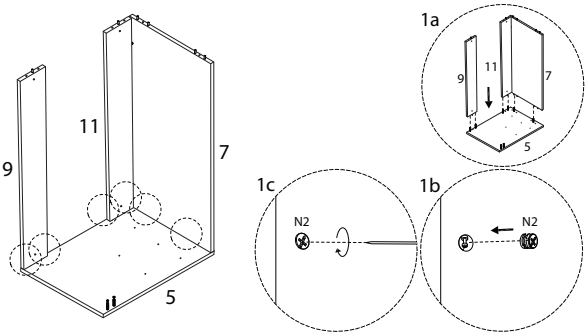

5

12 x 1

N2 x 2

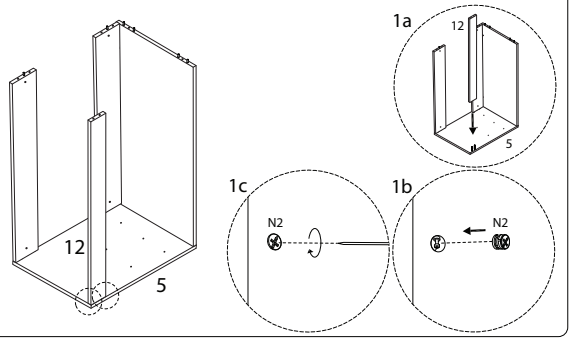

6

N2 x 8

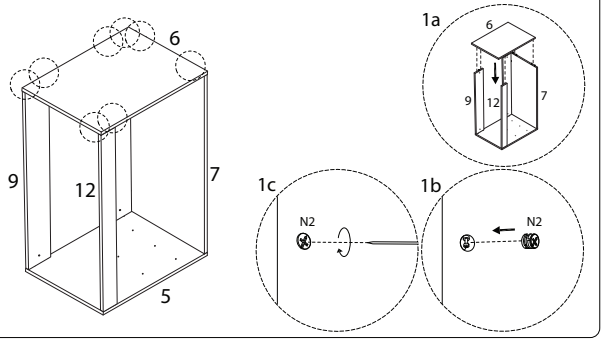

7

N2 x 8

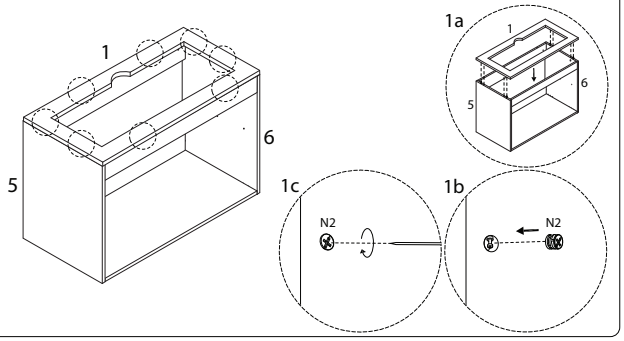

8

N7R x 1

N10 M4 x 14 x 3

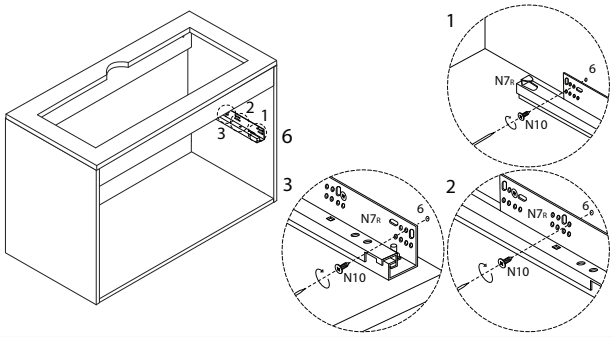

9

N7L x 1

N10 M4 x 14 x 3

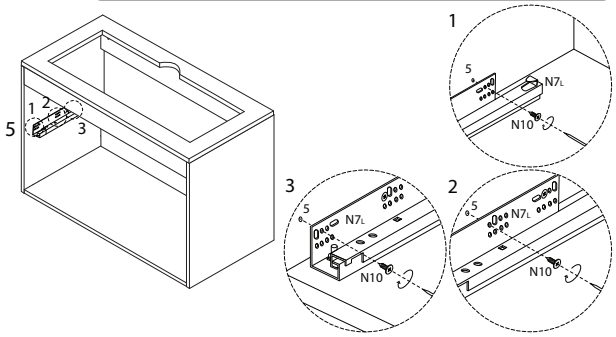

10

19 x 1

N2 x 4

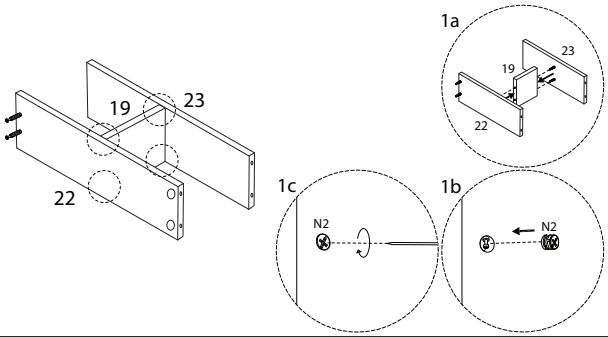

11

10 x 2

N2 x 8

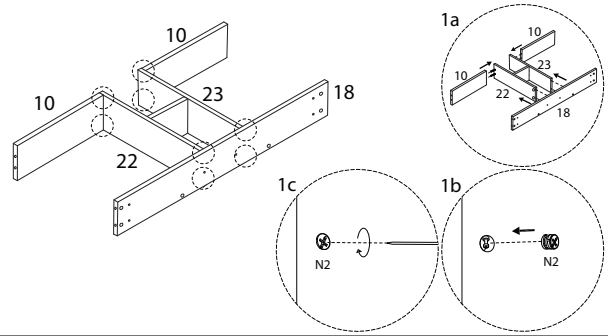

12

N2 x 6

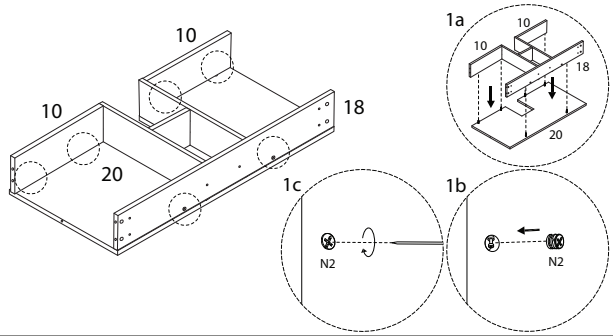

13

N2

x 10

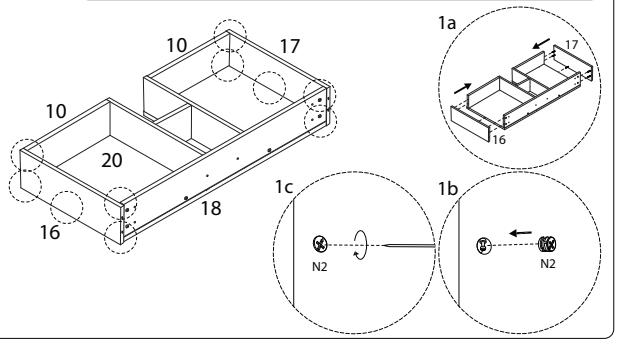

14

15

x 1

N12

M6 x 25

x 2

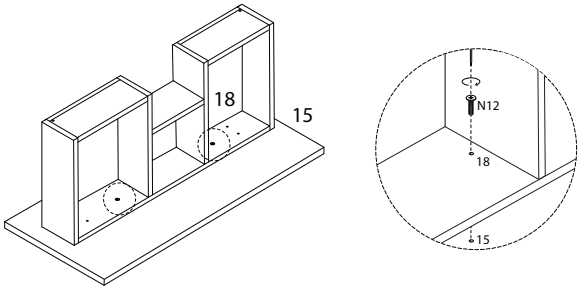

15

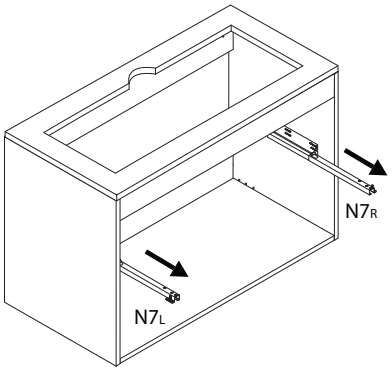

16

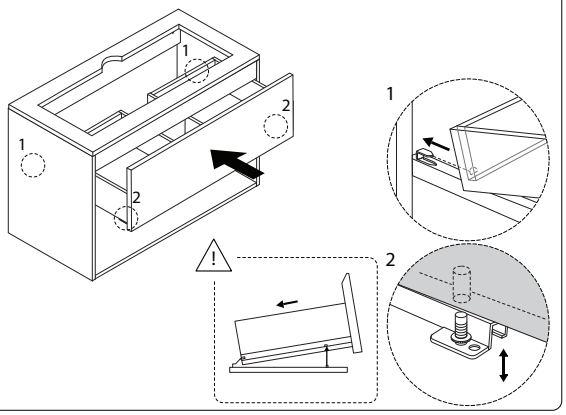

17

N10

M4 x 14

x 2

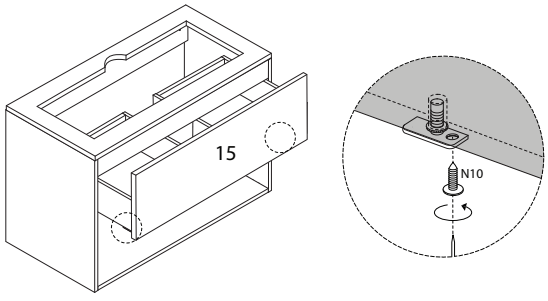

18

N11

M4 x 25

x 4

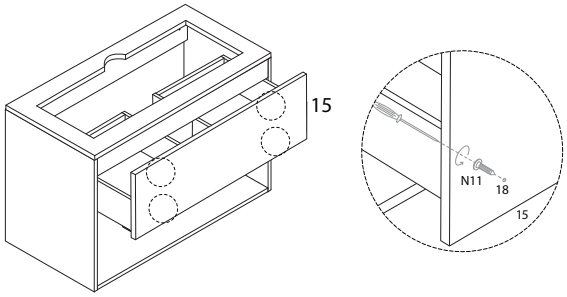

19

N10	N13₁	N13₂	N13₃
M4 x 14		M6 x 70	
x 16	x 2	x 2	x 2

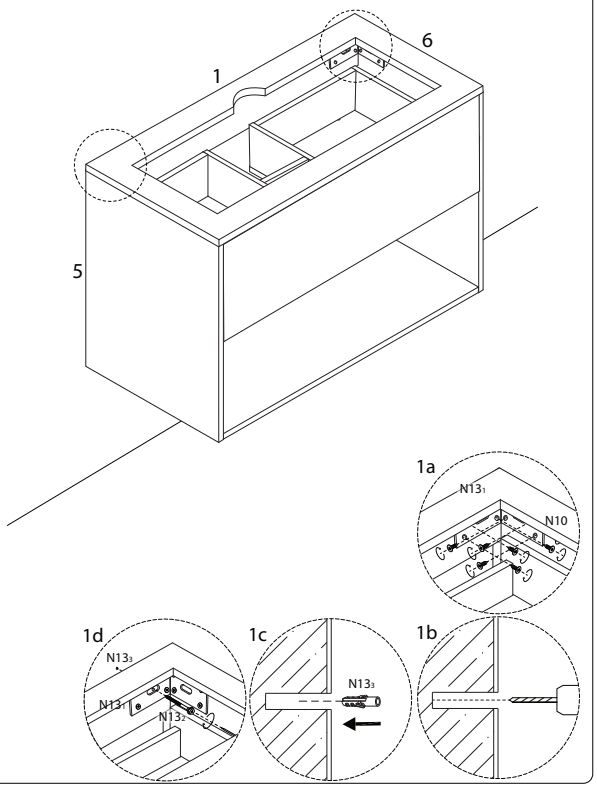

20

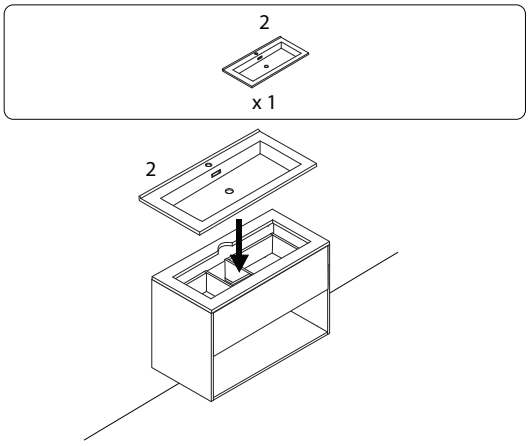

!

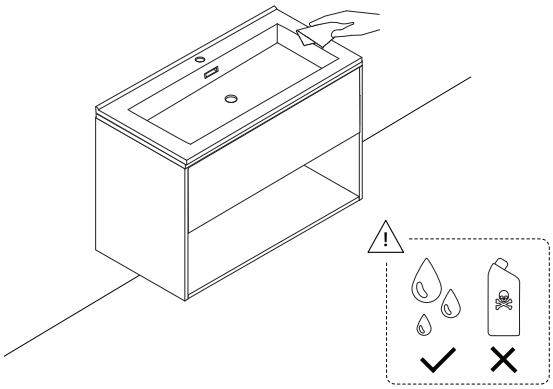

21

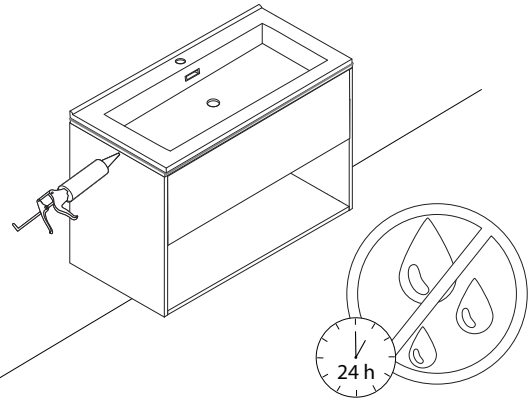

2353/BERBICE/010925/