ASSEMBLY INSTRUCTIONS

<<Before assembling,check all the hardwares and panels>>

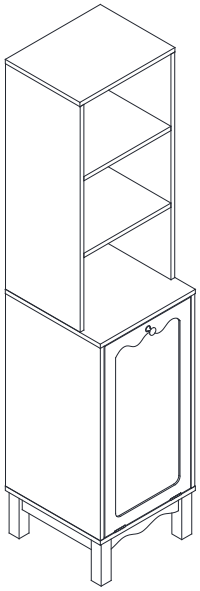

Hardware:

Letter	Piece	Number	Letter	Piece	Number
A	6x30mm	38pcs	J		2pcs
B	6x35mm	34pcs	K		2pcs
C	15x9.5mm	34pcs	L		2pcs
D		1pc	M		1pc
E	3x12mm	14pcs	N	4x12mm	2pcs
F	4x35mm	8pcs	O	4x30mm	4pcs
G	4x16mm	1pc	P		2sets
H	3x14mm	8sets			
I		1pc			

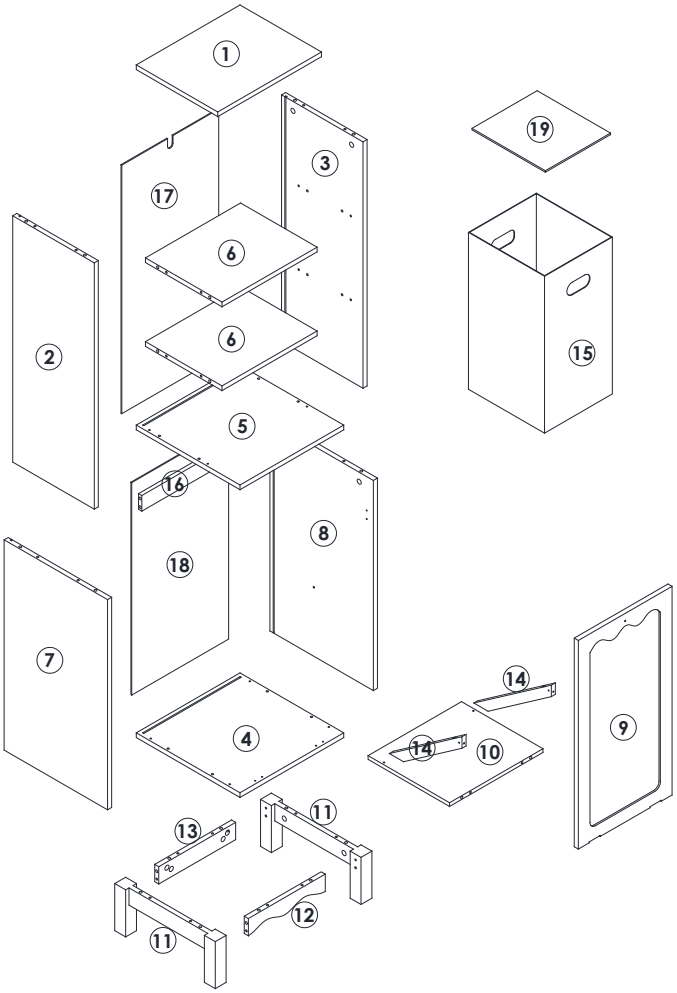

①

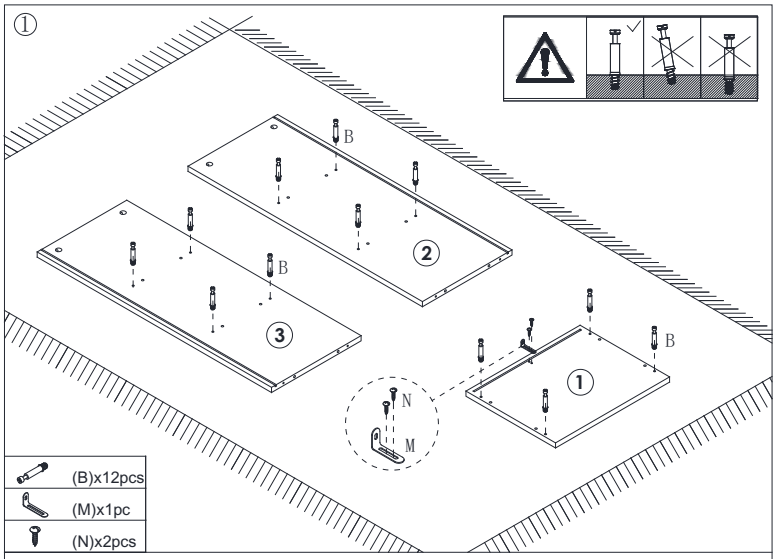

(B)x12pcs
(M)x1pc
(N)x2pcs

②

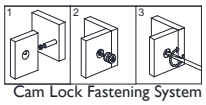

Cam Lock Fastening System

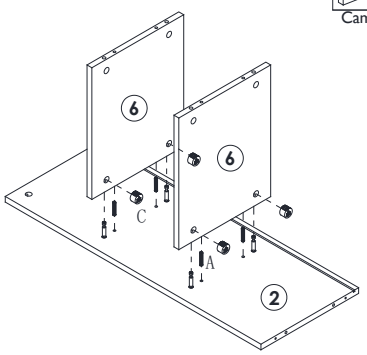

(A)x4pcs
(C)x4pcs

③

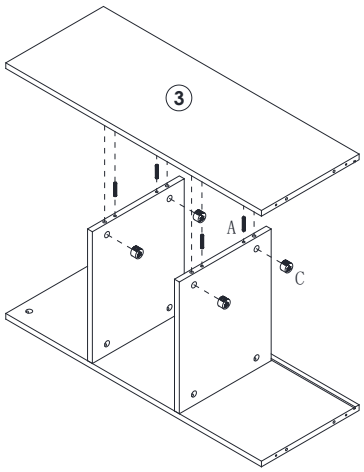

(A)x4pcs
(C)x4pcs

④

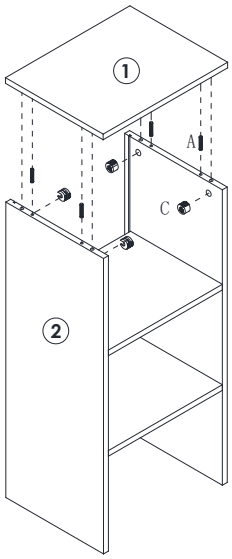

(A)x4pcs
(C)x4pcs

⑤

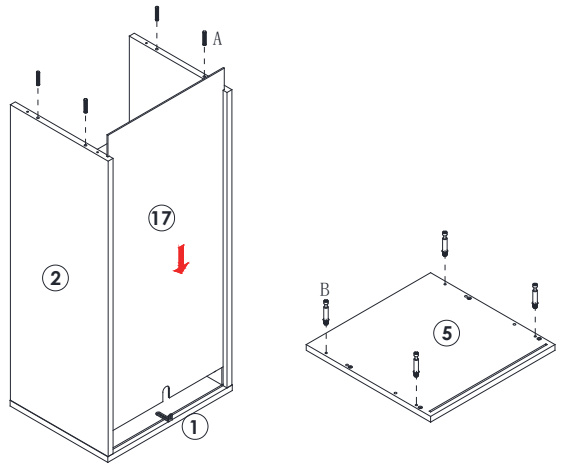

(A)x4pcs

(B)x4pcs

⑥

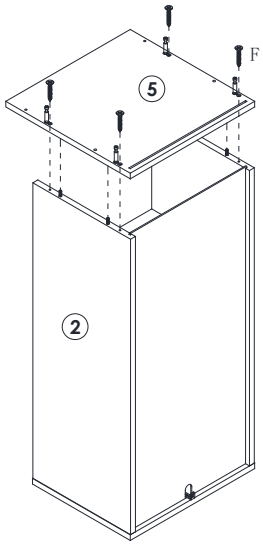

(F)x4pcs

⑦

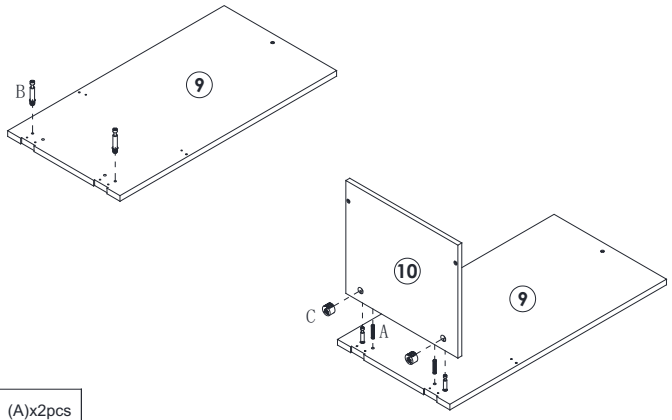

(A)x2pcs

(B)x2pcs

(C)x2pcs

⑧

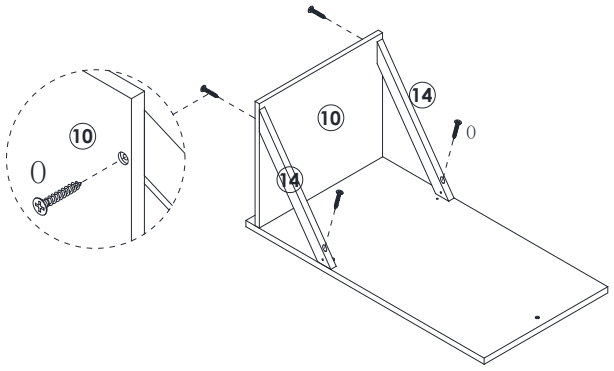

(O)x4pcs

⑨

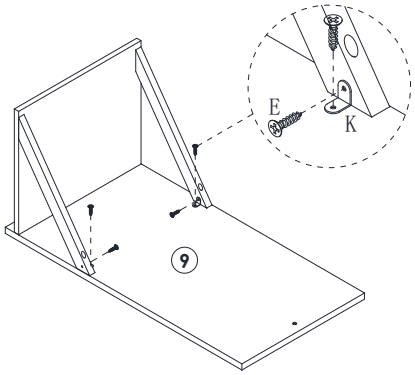

(E)x4pcs

(K)x2pcs

⑩

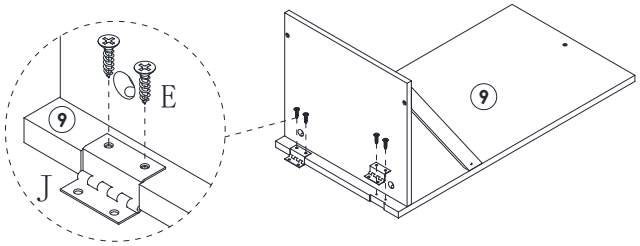

(E)x4pcs

(J)x2pcs

⑪

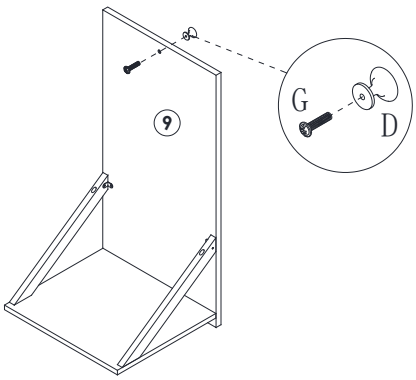

(D)x1pc

(G)x1pc

⑫

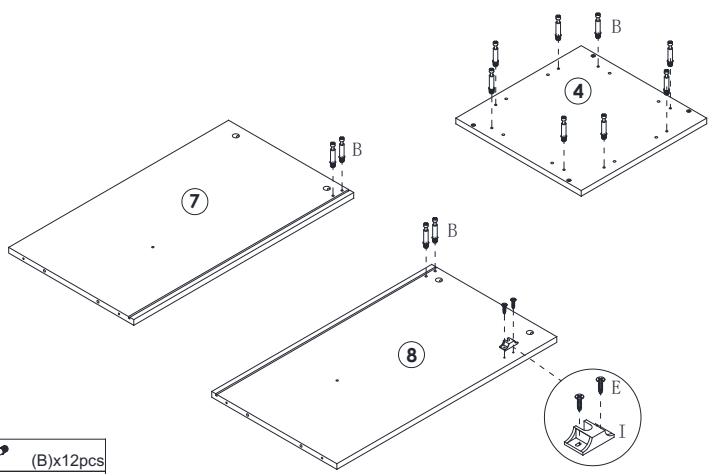

(B)x12pcs

(E)x2pcs

(I)x1pc

13

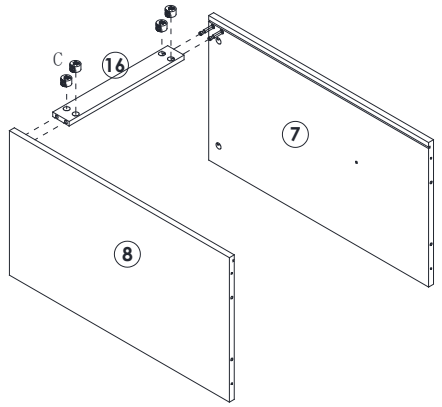

(C)x4pcs

15

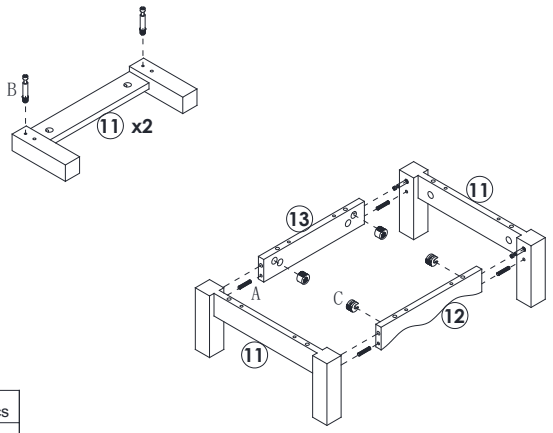

(A)x4pcs

(B)x4pcs

(C)x4pcs

14

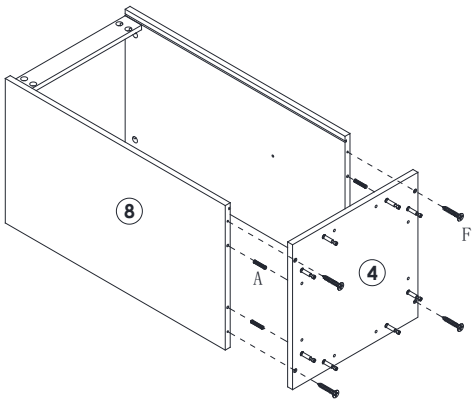

(A)x4pcs

(F)x4pcs

16

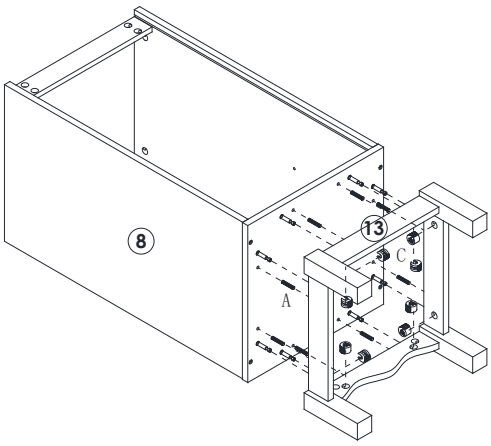

(A)x8pcs

(C)x8pcs

17

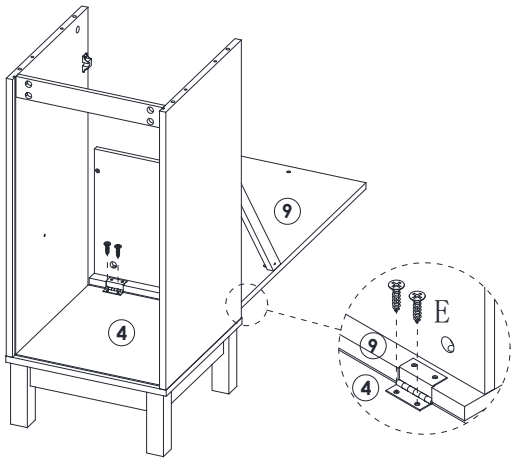

(E)x4pcs

18

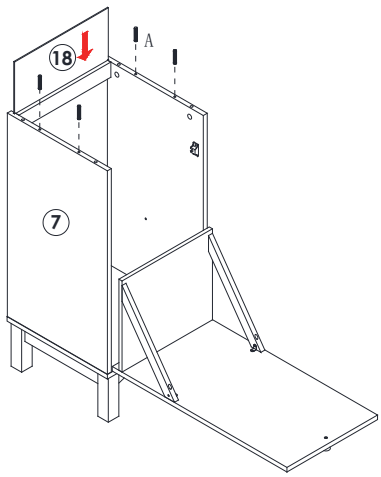

(A)x4pcs

19

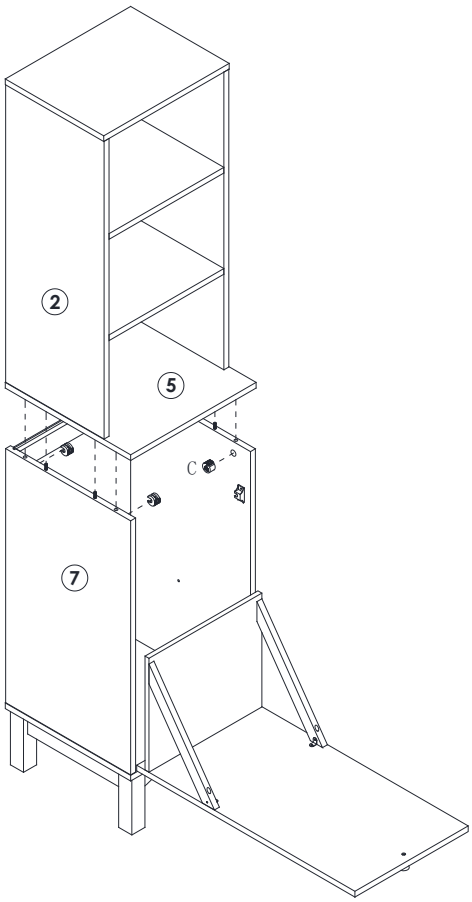

(C)x4pcs

20

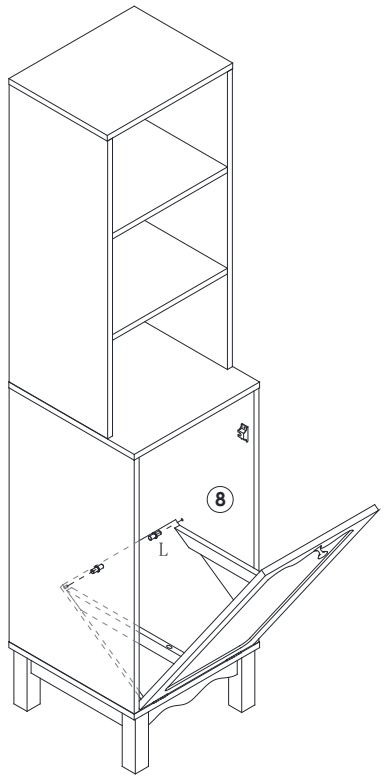

(L)x2pcs

13

21

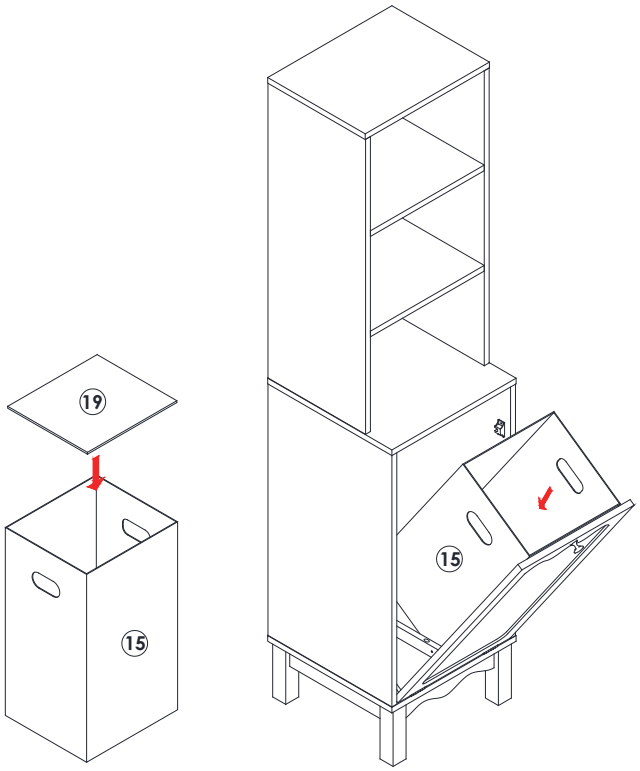

14

22

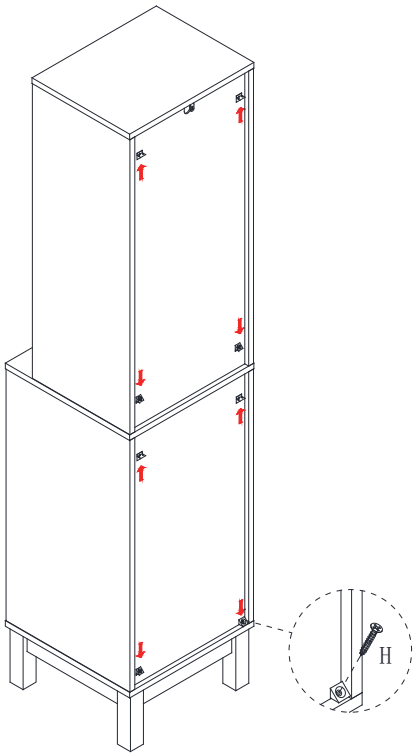

(H)x8sets

15

23

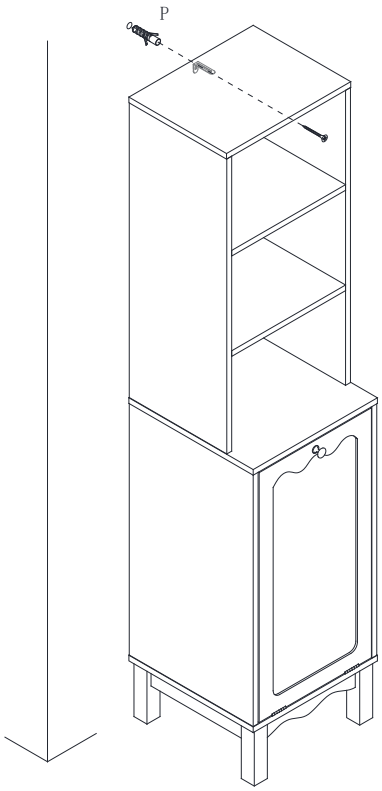

(P)x2sets

16