# AMLI

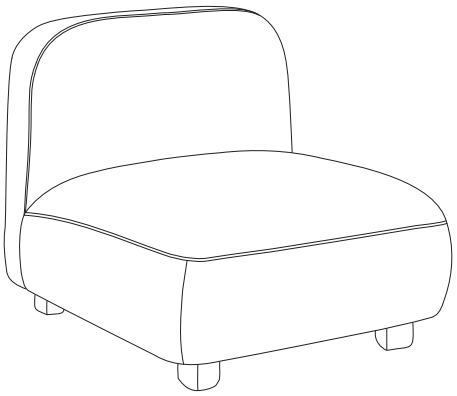

1/5

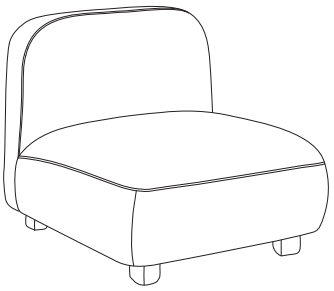

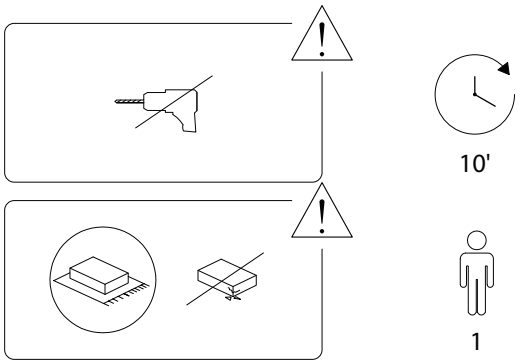


2/5

713/AMLI/120526

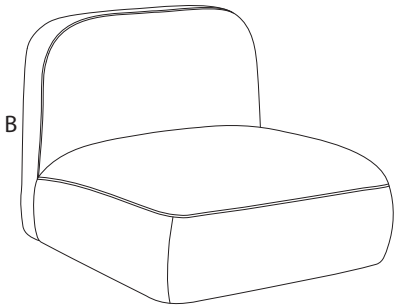


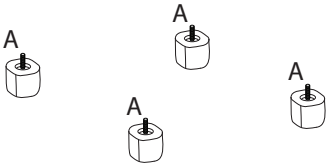


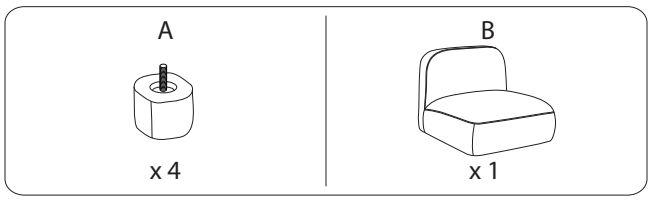


3/5

713/AMLI/120526

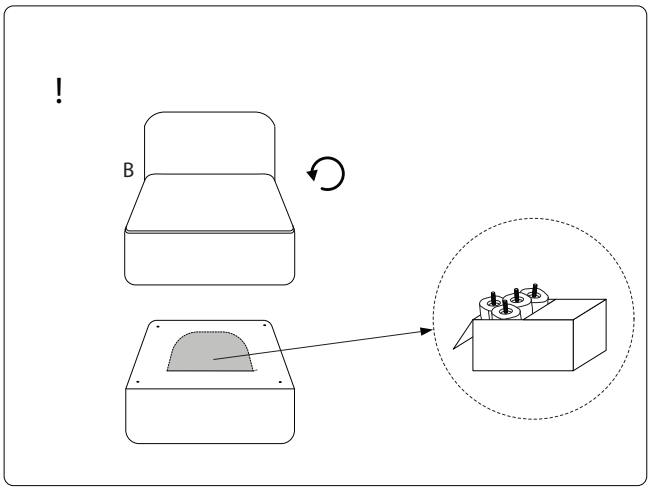


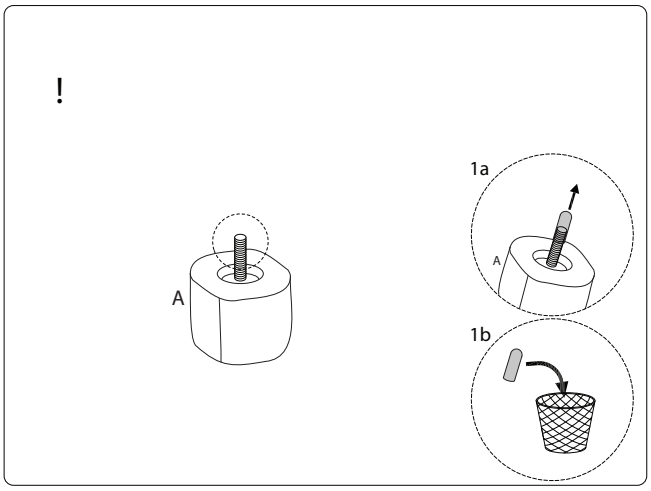


4/5

713/AMLI/120526

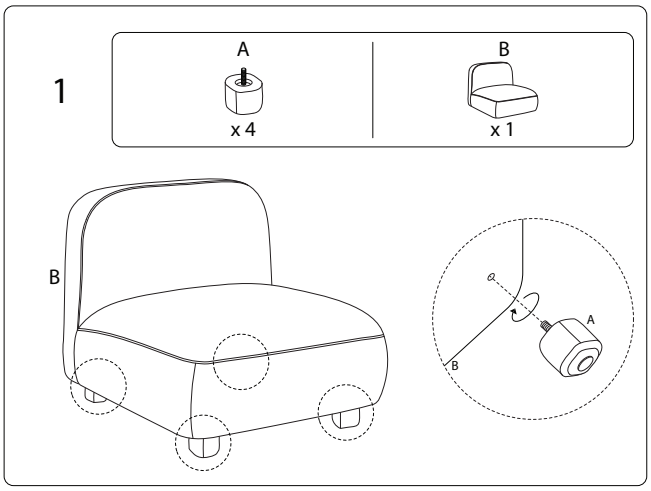


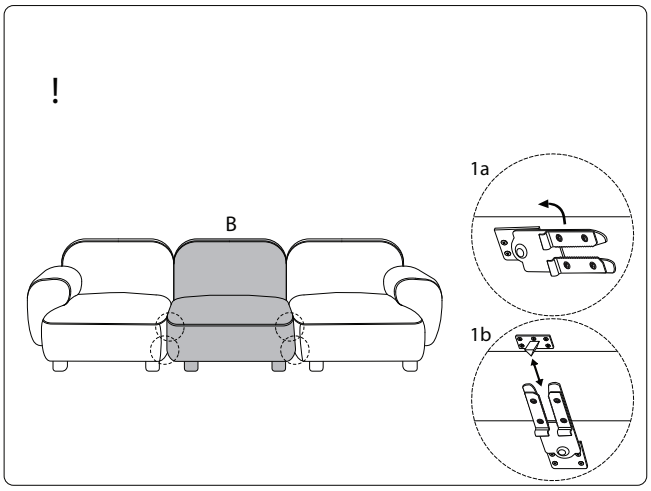




713/AMLI/120526