QUILPIE

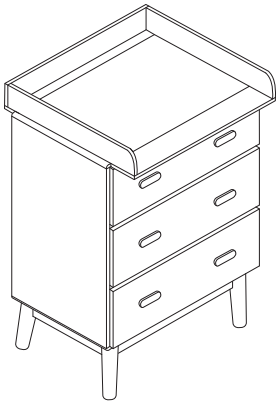

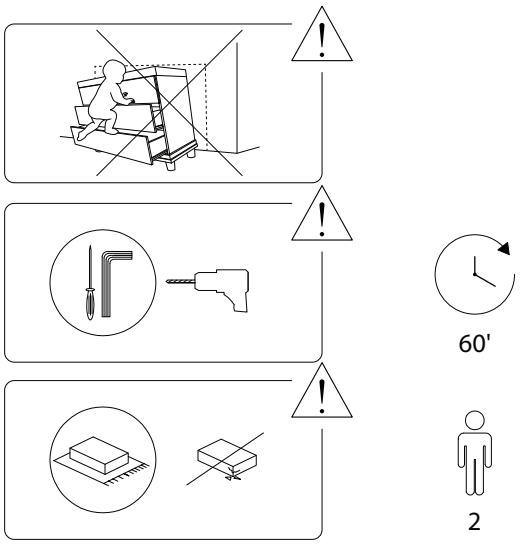
60'
2

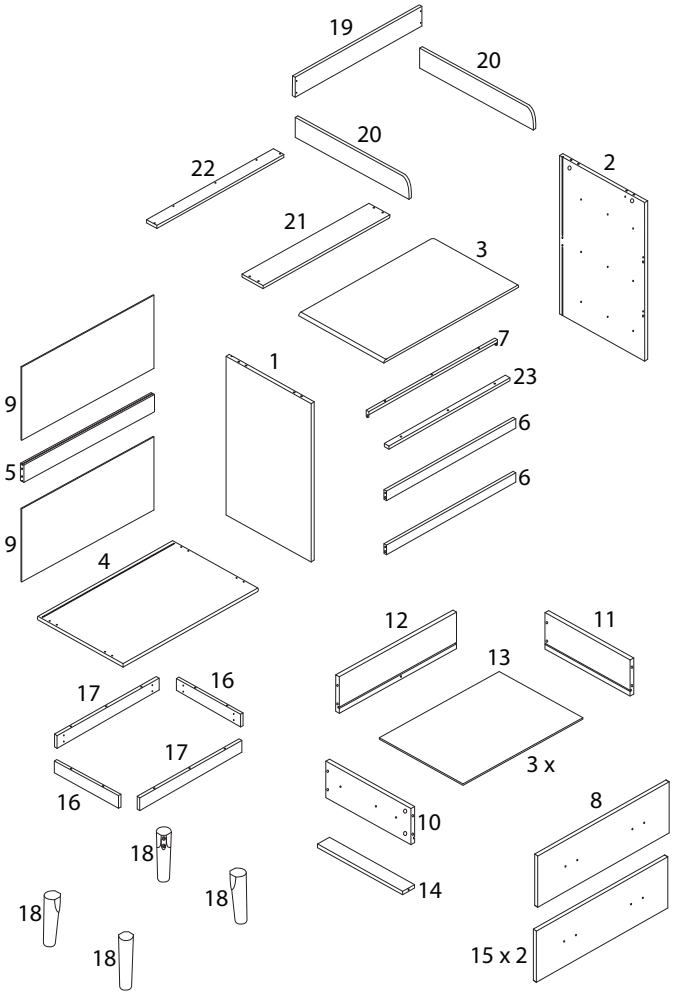
19
20
20
22
2
21
3
7
1
23
9
6
5
6
9
4
12
11
13
17
16
17
3 x
16
10
8
18
14
18
18
15 x 2
18

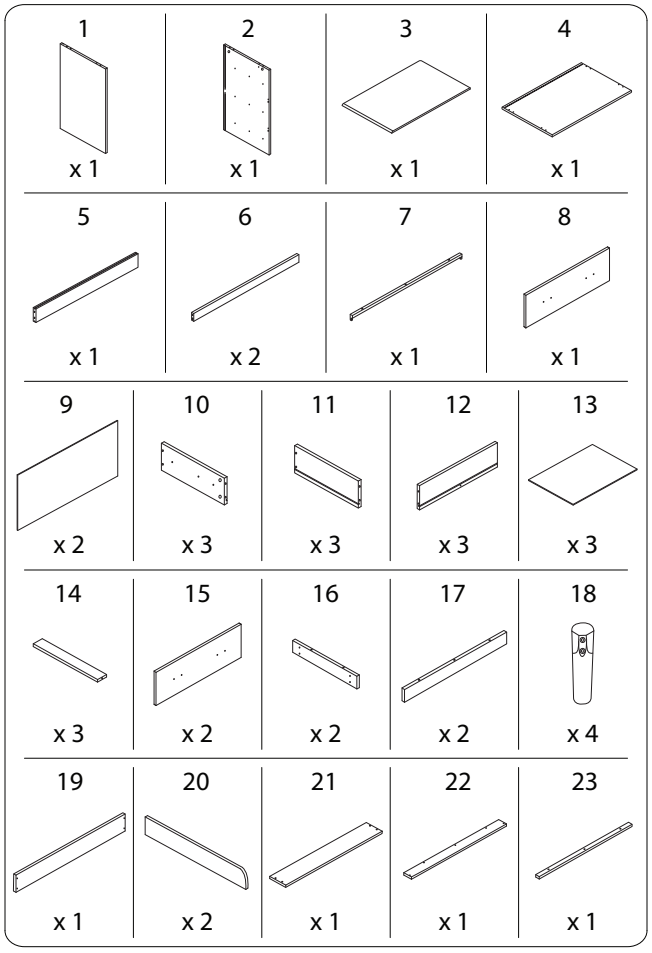
1 x 1
2 x 1
3 x 1
4 x 1
5 x 1
6 x 2
7 x 1
8 x 1
9 x 2
10 x 3
11 x 3
12 x 3
13 x 3
14 x 3
15 x 2
16 x 2
17 x 2
18 x 4
19 x 1
20 x 2
21 x 1
22 x 1
23 x 1

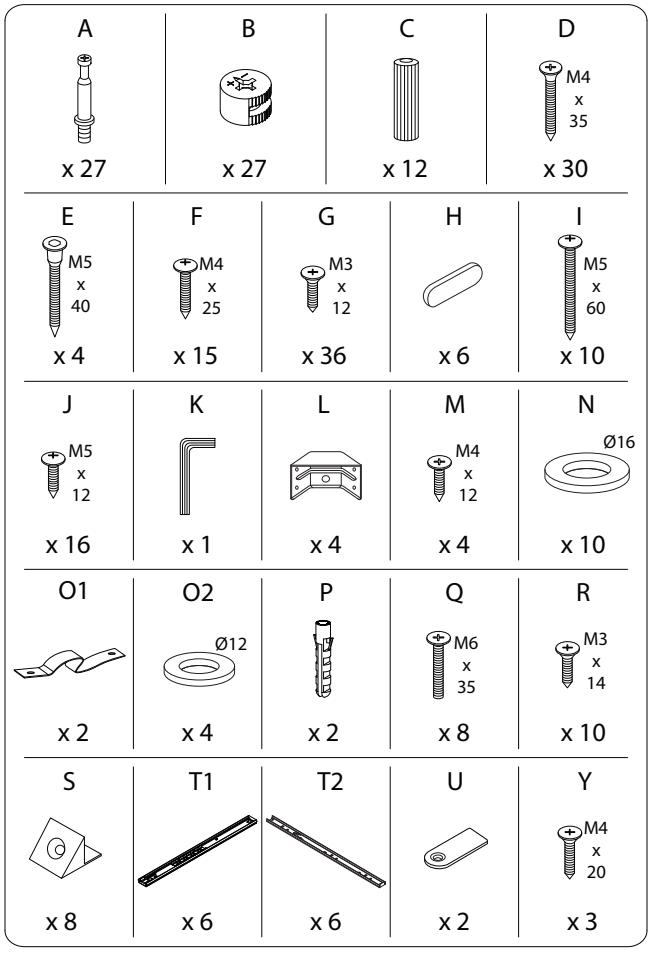
A
x 27
B
x 27
C
x 12
D
M4 x 35
x 30
E
M5 x 40
x 4
F
M4 x 25
x 15
G
M3 x 12
x 36
H
x 6
I
M5 x 60
x 10
J
M5 x 12
x 16
K
x 1
L
x 4
M
M4 x 12
x 4
N
Ø16
x 10
O1
x 2
O2
Ø12
x 4
P
x 2
Q
M6 x 35
x 8
R
M3 x 14
x 10
S
x 8
T1
x 6
T2
x 6
U
x 2
Y
M4 x 20
x 3

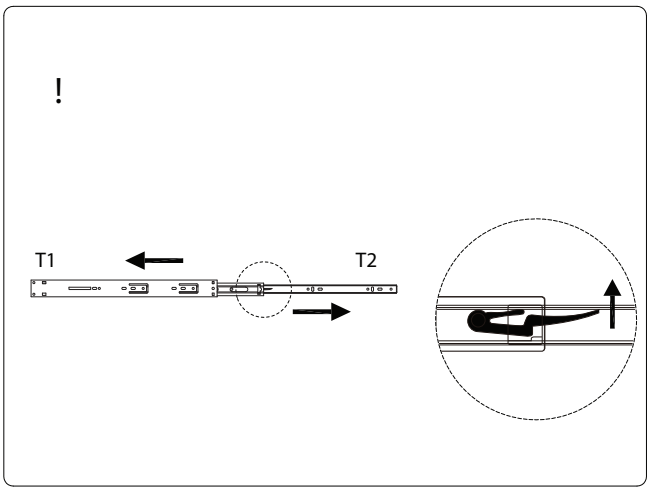
!
T1
T2

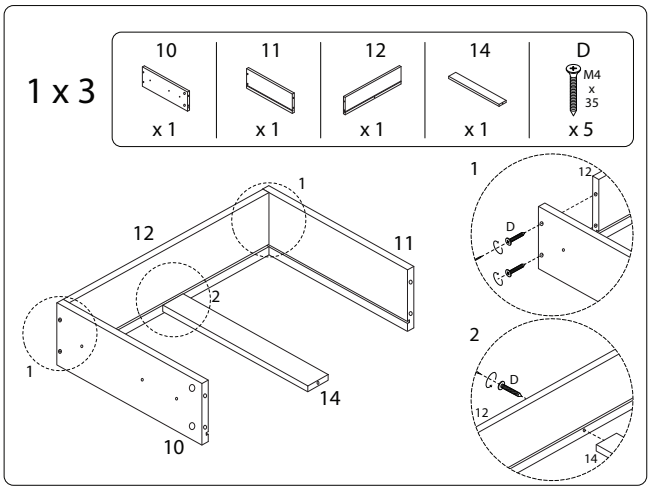
1 x 3
10
x 1
11
x 1
12
x 1
14
x 1
D
M4 x 35
x 5
1
2
10
11
12
14
D

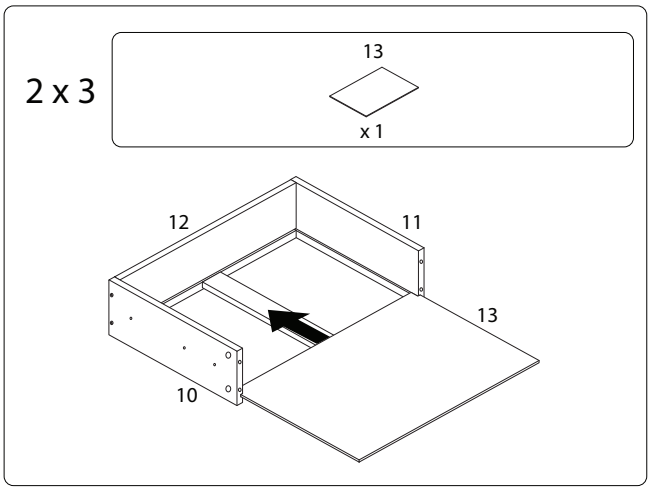
2 x 3
13
x 1
12
11
13
10

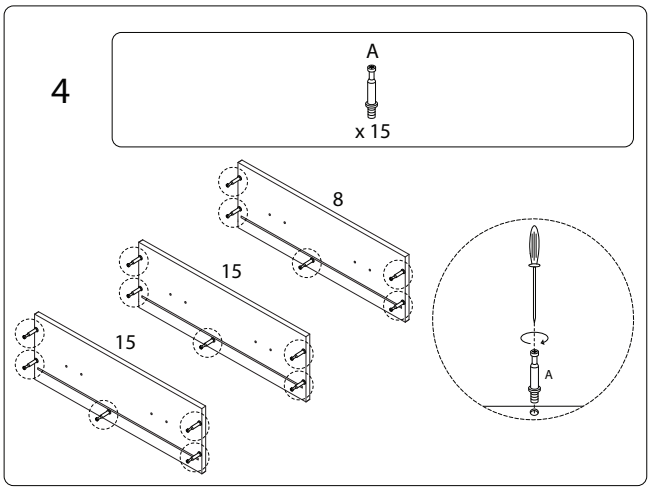
4
A
x 15
8
15
15
A

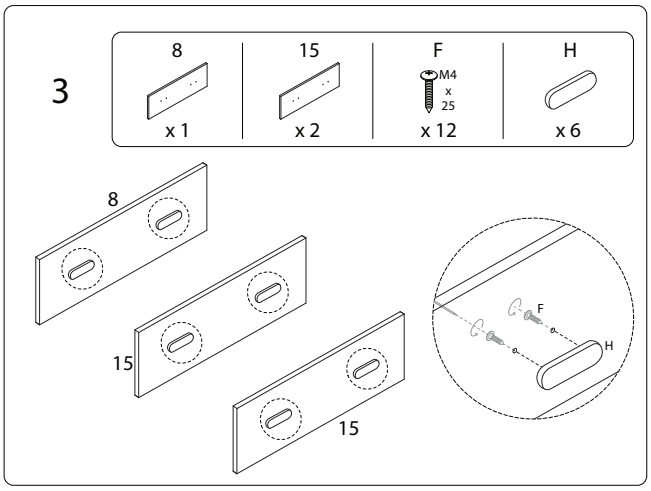
3
8
x 1
15
x 2
F
M4 x 25
x 12
H
x 6
8
15
15
F
H

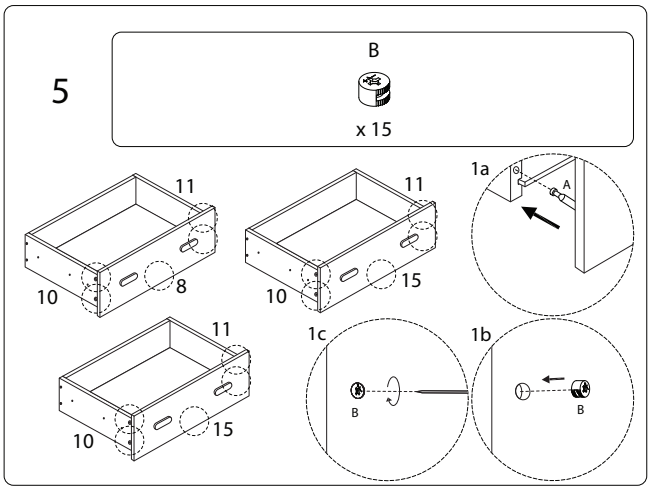
5
B
x 15
11
10
8
11
10
15
1a
A
11
10
15
1c
B
1b
B

6

G	T2
M3 x 12	
x 18	x 6

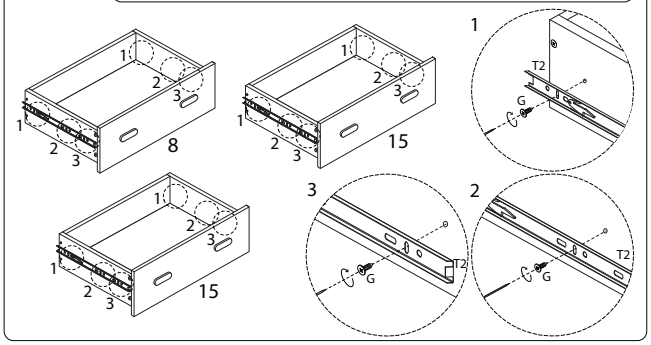

7

1	2	G	T1
		M3 x 12	
x 1	x 1	x 18	x 6

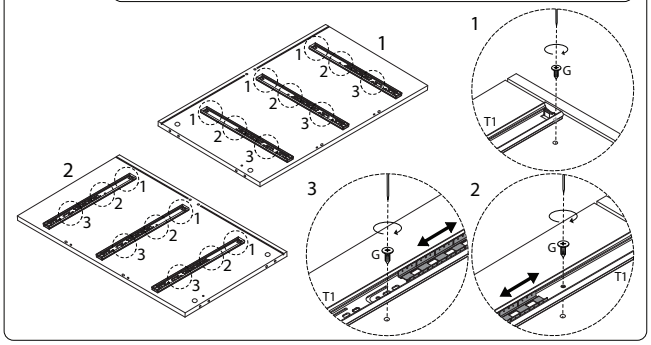

8

A
x 8

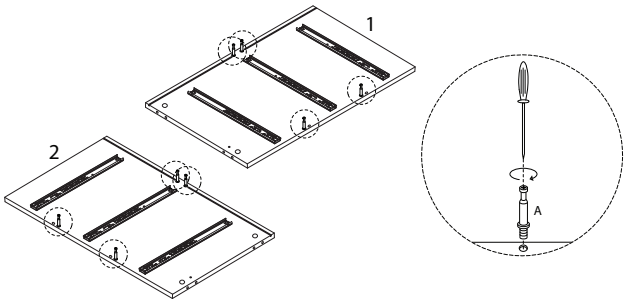

9 x 2

6	C
x 1	x 2

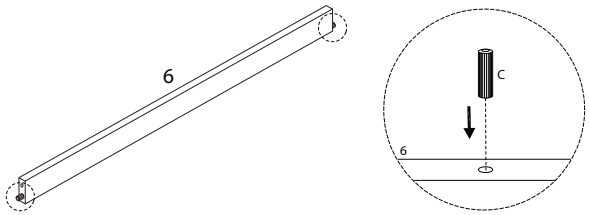

10

5	B
x 1	x 4

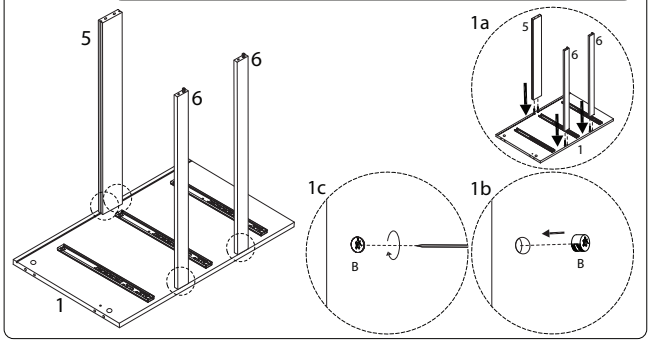

11

7	M	N
	M4 x 12	Ø16
x 1	x 1	x 1

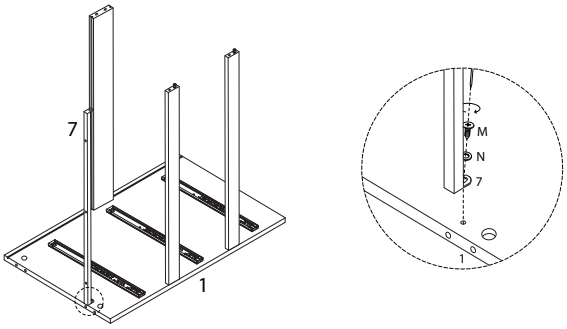

12

B
x 4

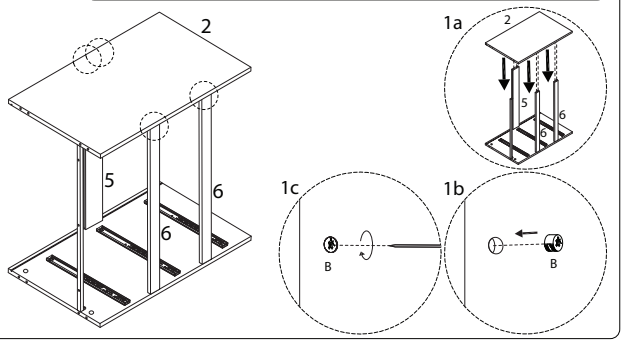

13

M	N
M4 x 12	Ø16
x 1	x 1

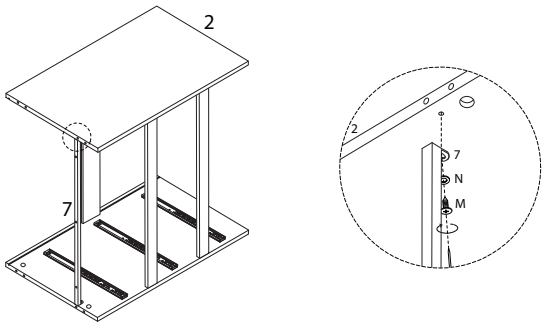

14

9	C
x 1	x 4

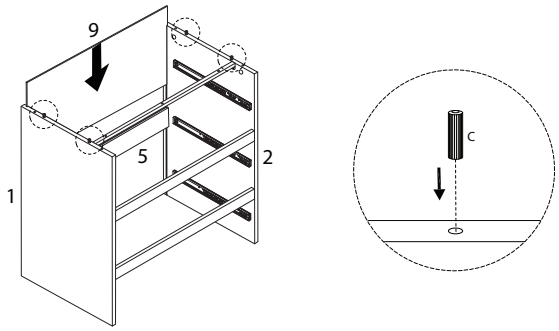

15

3	23	A	Y
x 1	x 1	x 4	M4 x 20 x 3

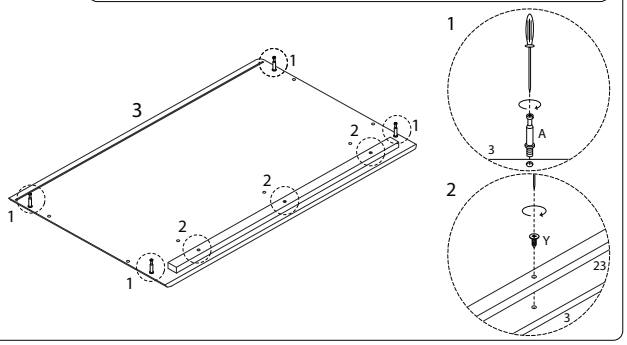

16

B	F
x 4	M4 x 25 x 3

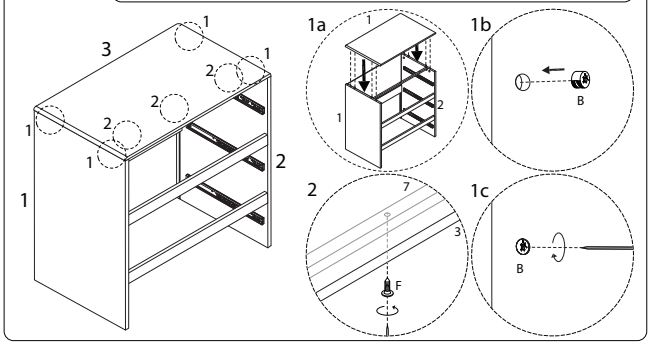

17

9	C
x 1	x 4

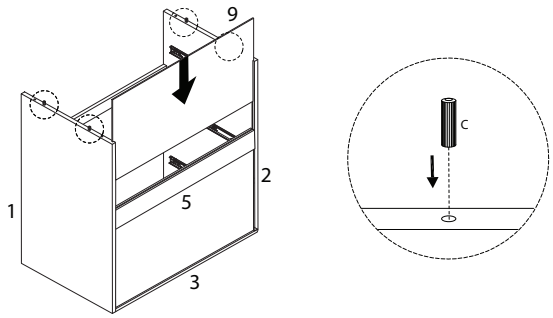

18

4	E	K
x 1	M5 x 40 x 4	x 1

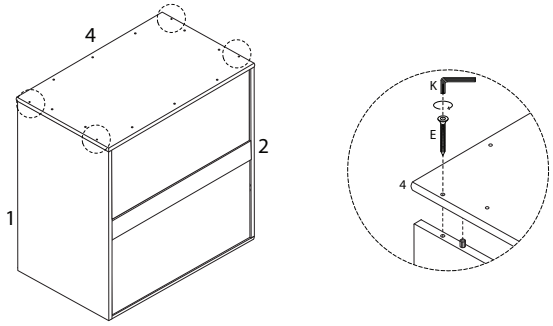

19

16	17	J	L
x 2	x 2	M5 x 12 x 16	x 4

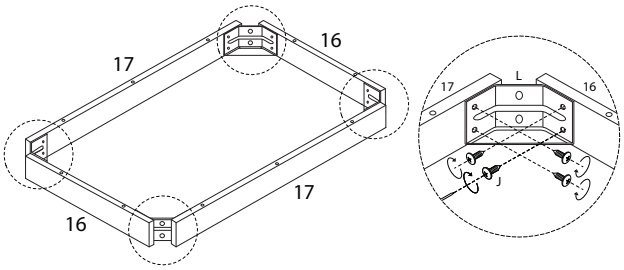

20

I
M5 x 60 x 10

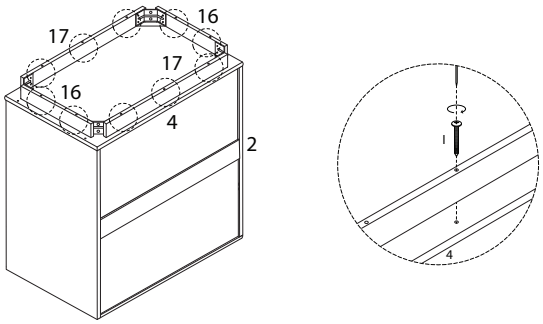

21

18	N	Q
x 4	Ø16 x 8	M6 x 35 x 8

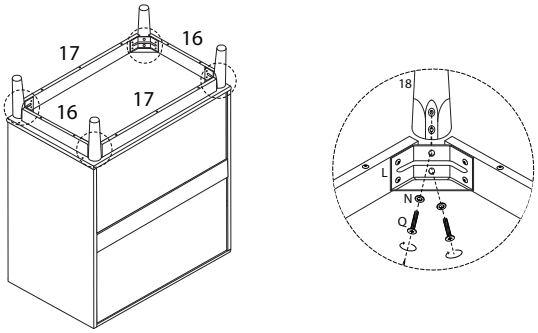

22

R	S
M3 x 14	
x 8	x 8

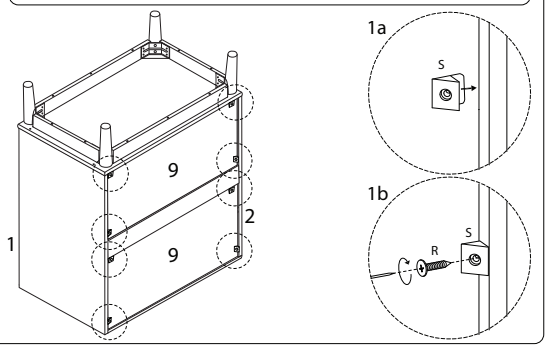

23

M	O1	O2
M4 x 12		Ø12
x 2	x 2	x 2

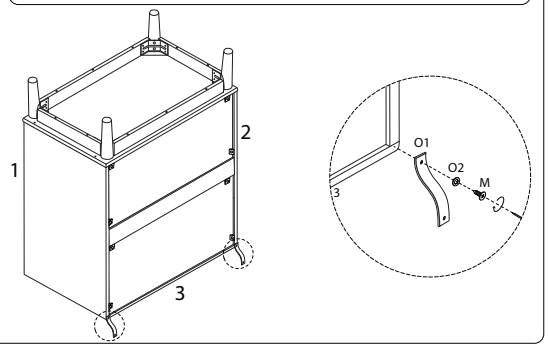

24

D	O2	P
M4 x 35	Ø12	
x 2	x 2	x 2

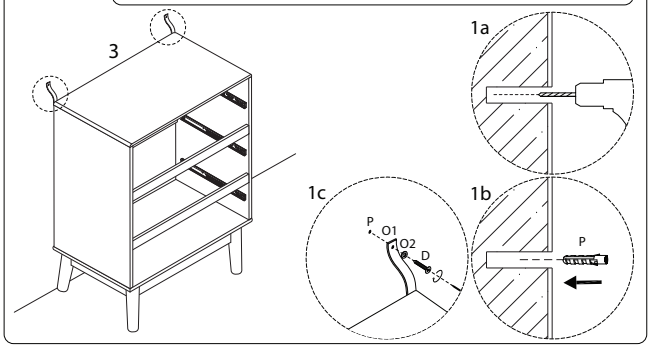

25

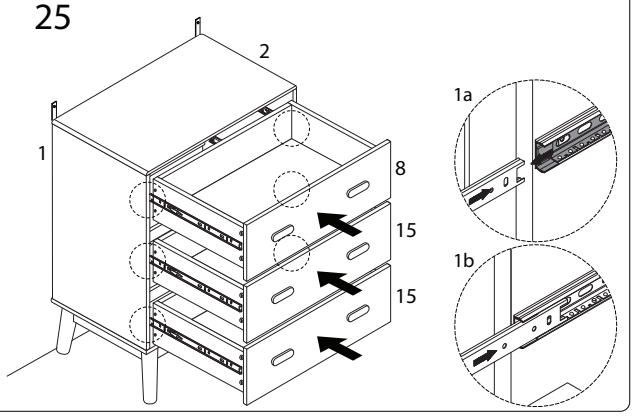

26

19	20	21	D
			M4 x 35
x 1	x 2	x 1	x 8

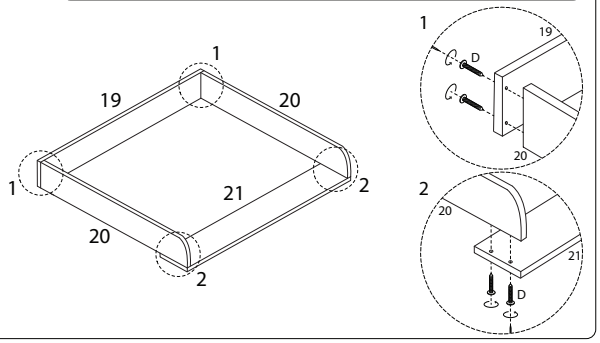

27

22	D
	M4 x 35
x 1	x 5

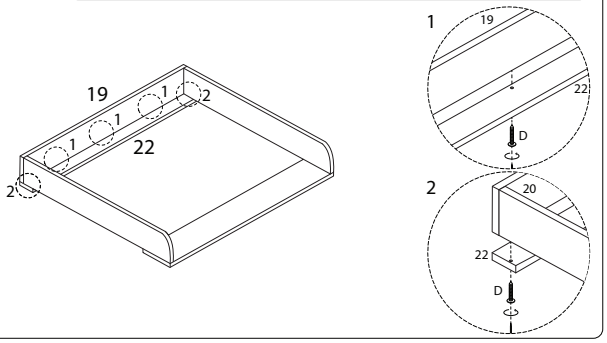

28

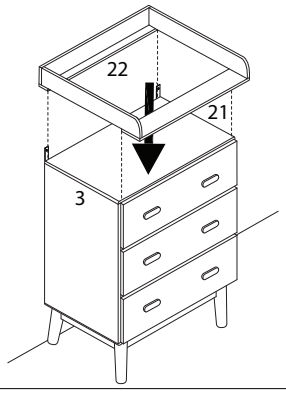

29

R	U
M3 x 14	
x 2	x 2

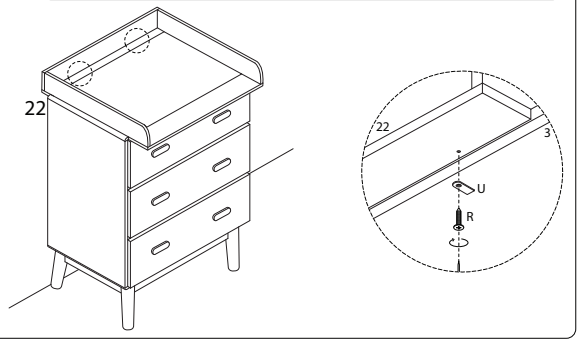

!

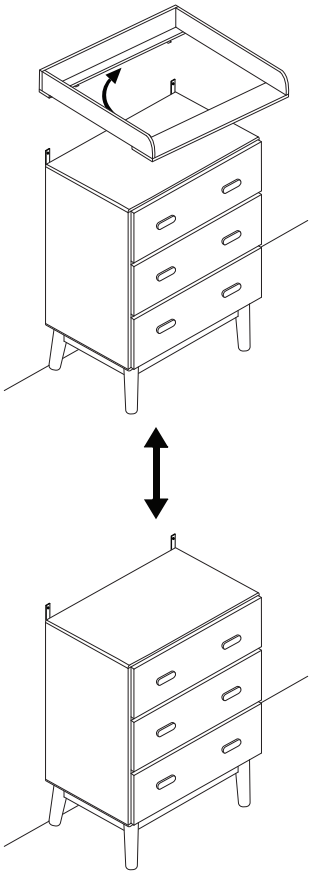

1658/QUILPIE/100326/