OGDEN

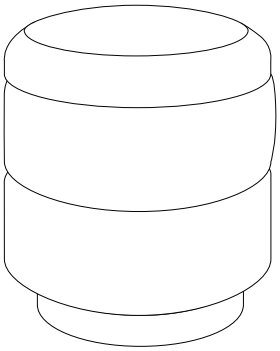

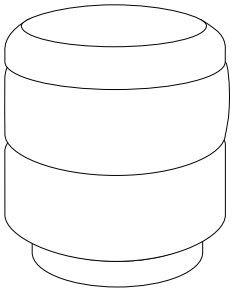

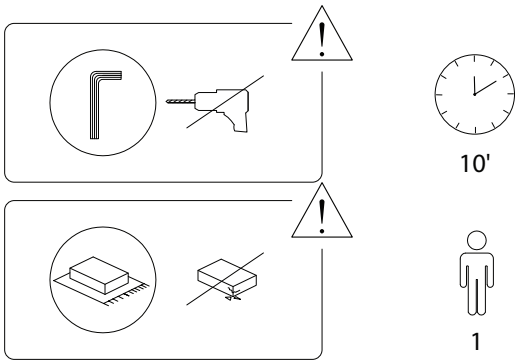

Beliani

Beliani
1297/OGDEN/171123/

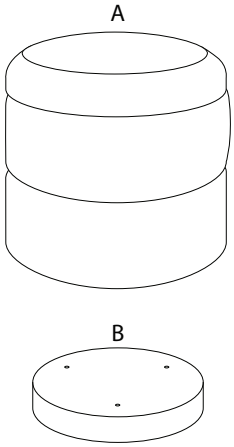

A	B	C	D	E
				
			M6 x 14	
x 1	x 1	x 1	x 3	x 4

Beliani
1297/OGDEN/171123/

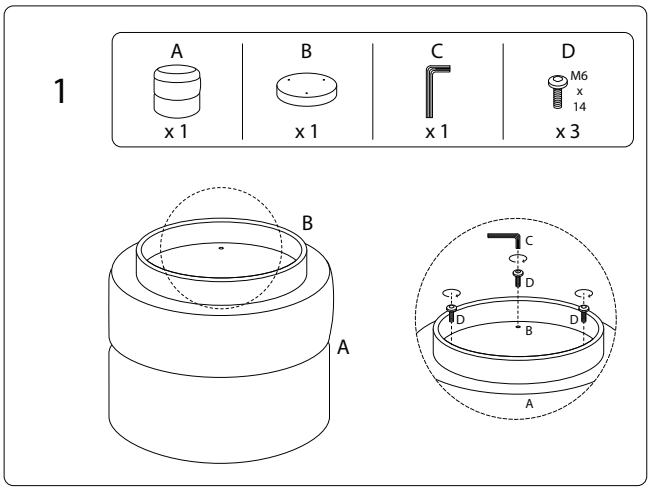

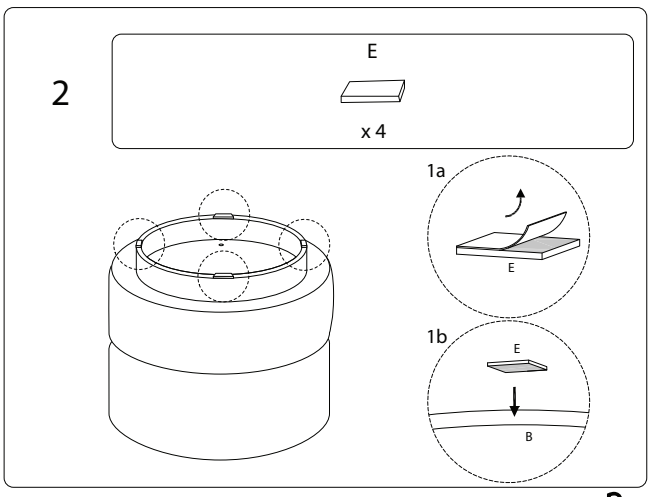

Beliani
1297/OGDEN/171123/