PERROS

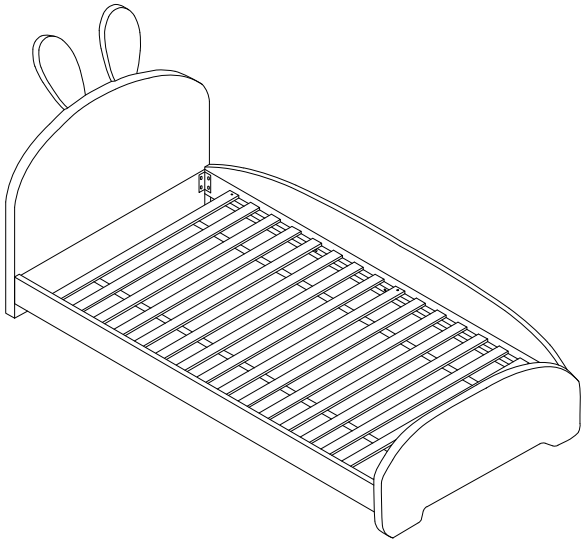

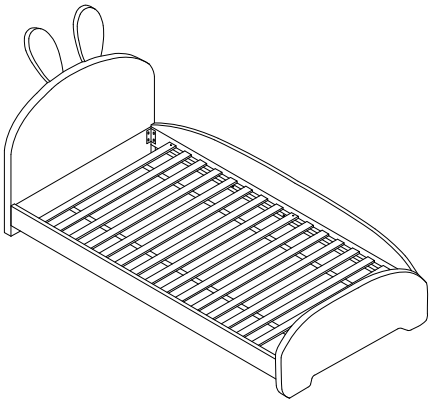

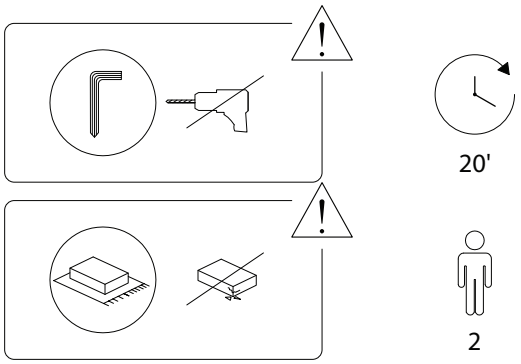

1	2	3	4
x 1	x 1	x 1	x 1

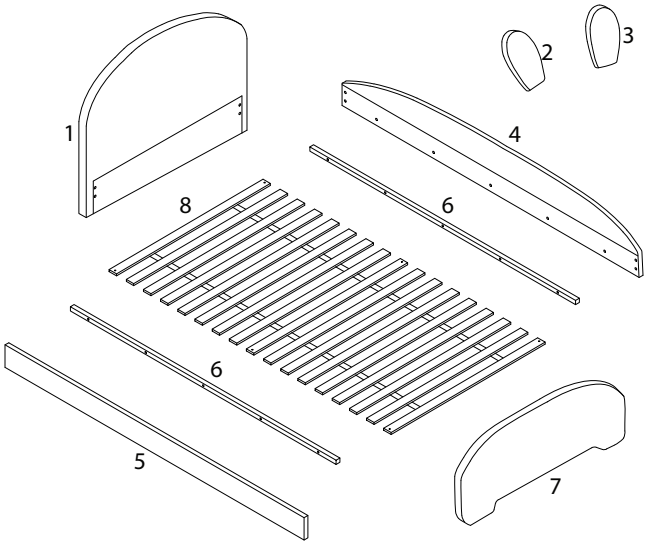

5	6	7	8
x 1	x 2	x 1	x 1

A	B	C
x 1	M8 x 40 x 10	M8 x 18 x 24
D	**E**	**F**
x 2	x 4	M4 x 25 x 6

!

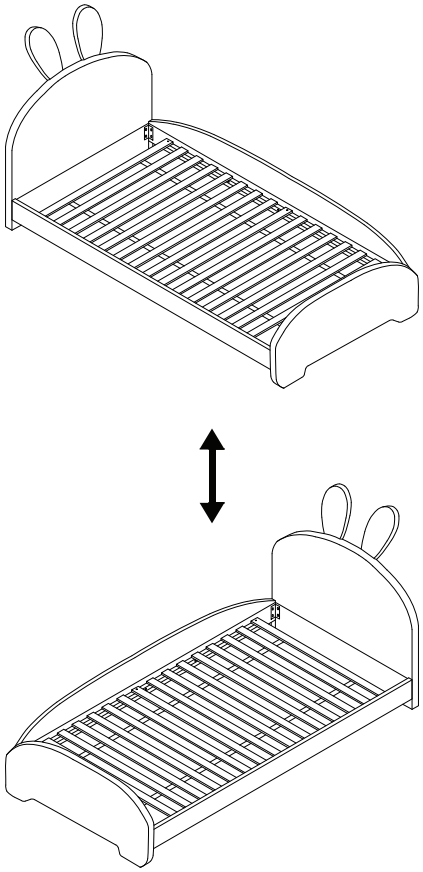

4/6

2544/PERROS/240125/

1

1	2	3	A	C	D
x 1	x 1	x 1	x 1	x 8	x 2

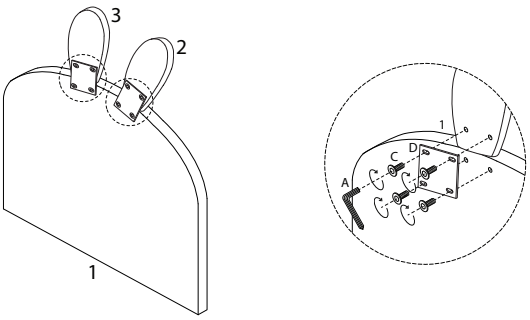

2

4	5	6	A	B
x 1	x 1	x 2	x 1	x 10

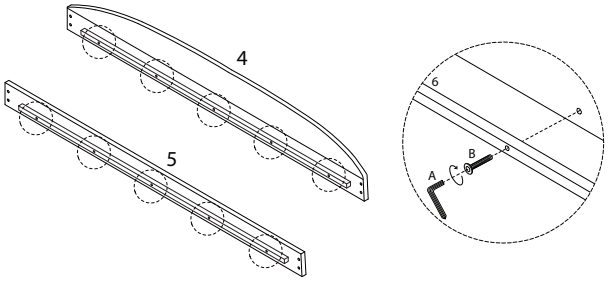

5/6

2544/PERROS/240125/

3

7	A	C	E
x 1	x 1	x 16	x 4

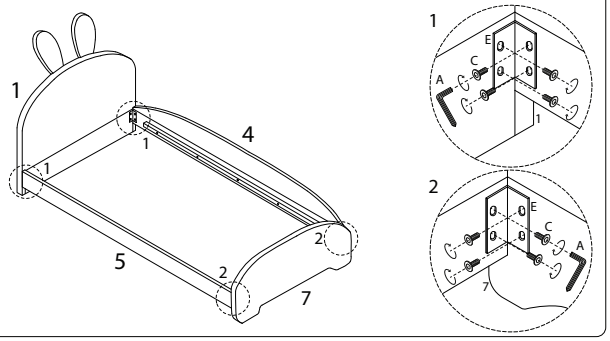

4

8	A	F
x 1	x 1	x 6

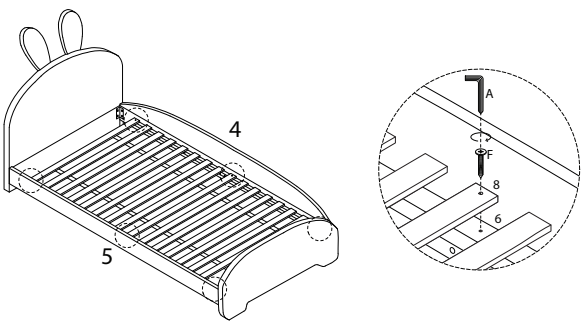

6/6

2544/PERROS/240125/