PALMAS

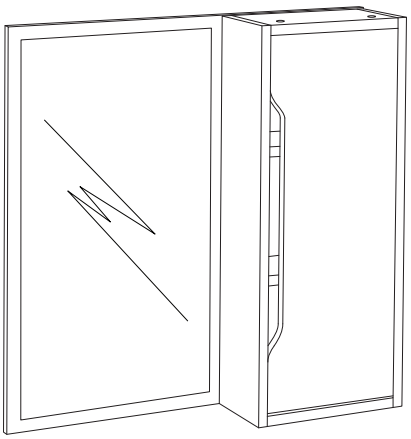

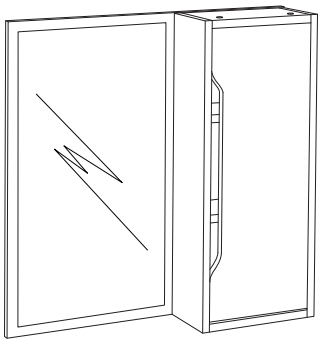

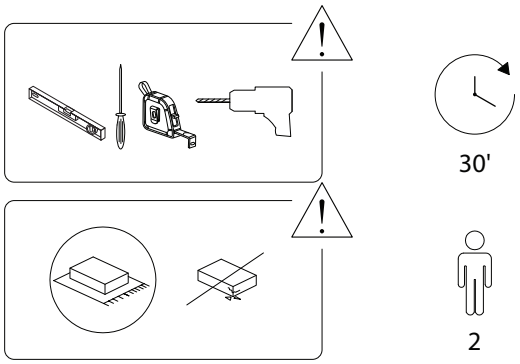

1/12

!

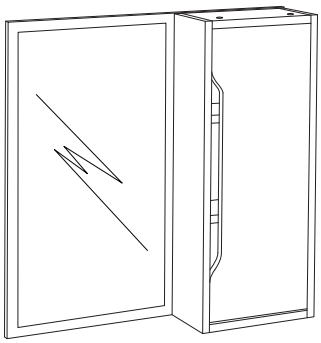

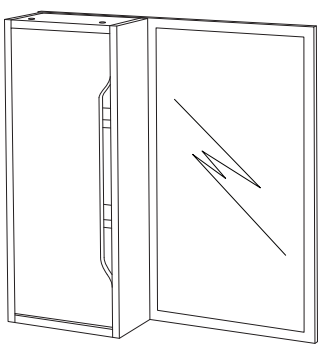

2/12

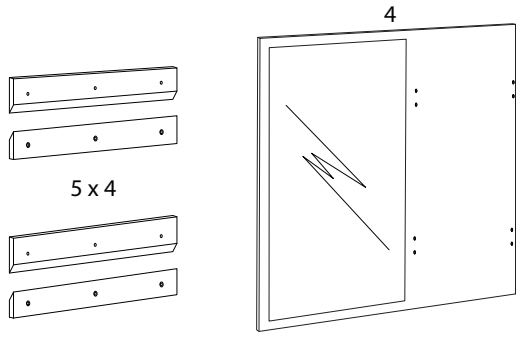

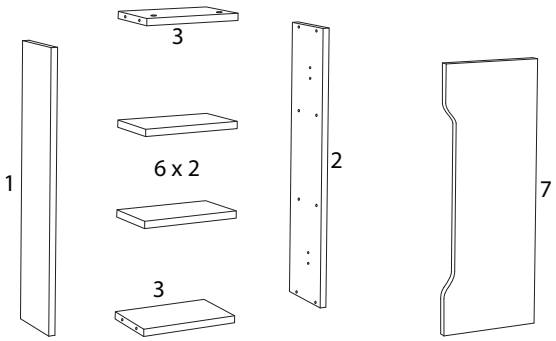

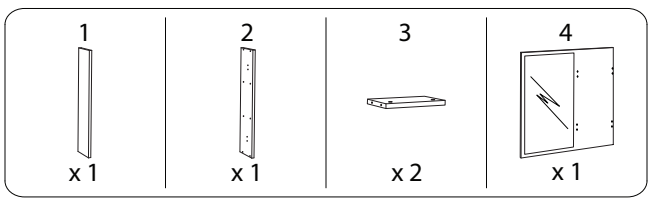

3/12

5	6	7
		
x 4	x 2	x 1
A	**B**	**C**
 M3.5 x 14	 M4 x 25	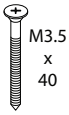 M3.5 x 40
x 8	x 6	x 4
D	**E**	**F**
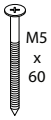 M5 x 60	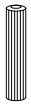	
x 4	x 8	x 4
G	**H**	**I**
		
x 4	x 4	x 4
J	**K**	
		
x 2	x 8	

2364/PALMAS/190525/

!

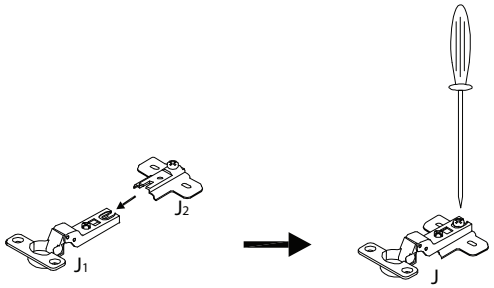

1

1	2	3	E	H	K
x 1	x 1	x 2	x 8	x 4	x 8

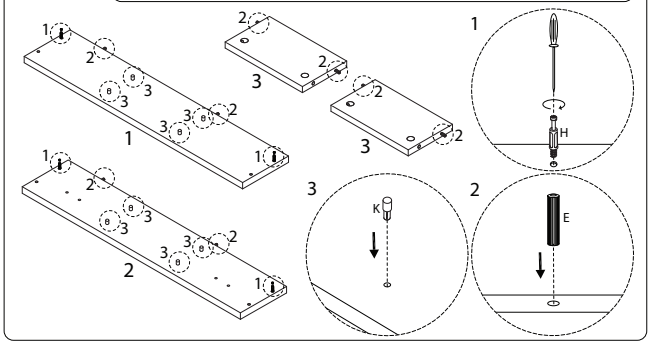

2364/PALMAS/190525/

2

7	A	J
x 1	M3.5 x 14 x 4	x 2

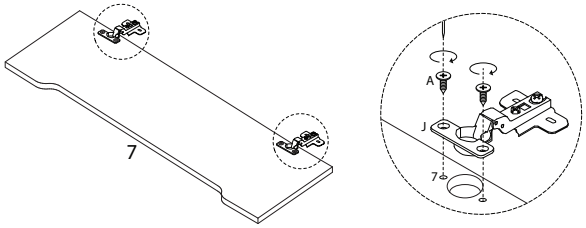

4

4	C
x 1	M3.5 x 40 x 4

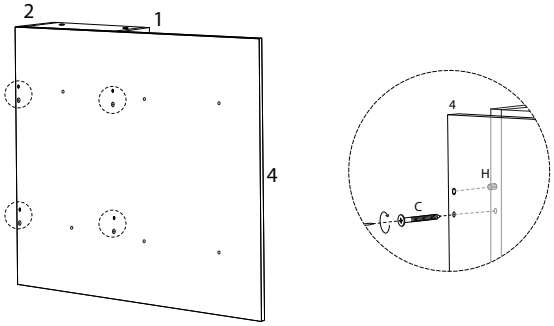

3

I
x 4

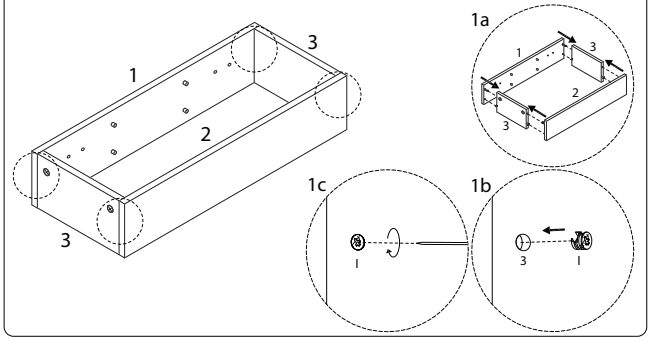

2364/PALMAS/190525/

5

5	B
x 2	M4 x 25 x 6

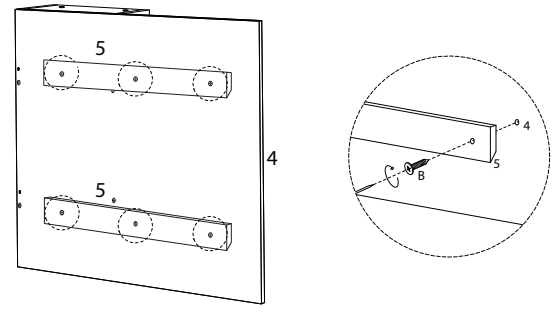

2364/PALMAS/190525/

6

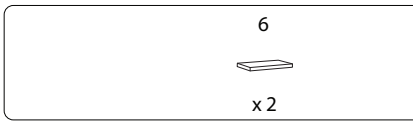
6
x 2

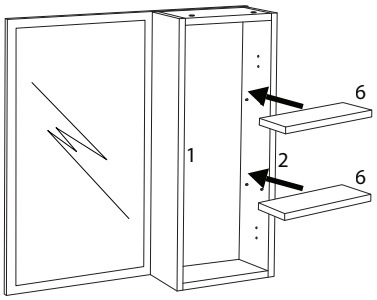
6
1
2
6

7

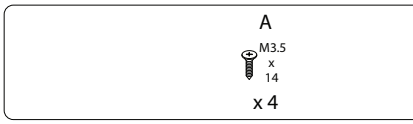
A
M3.5
x
14
x 4

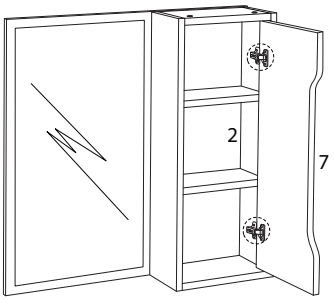
2
7

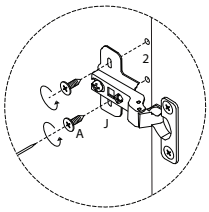
2
J
A

!

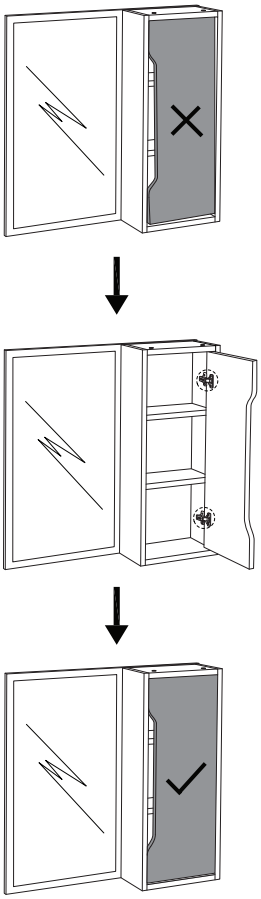

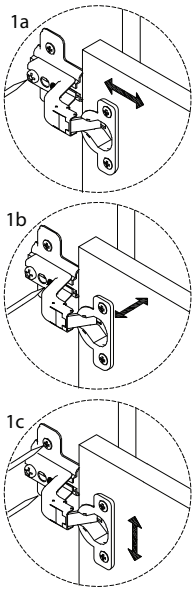
1a
1b
1c

8

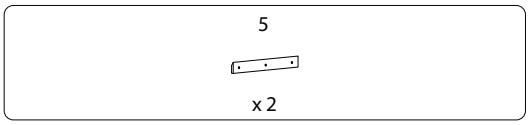
5
x 2

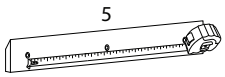
5

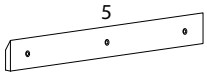
5

10

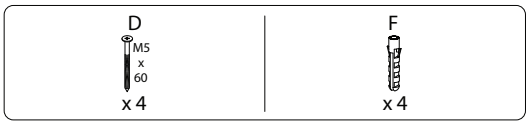
D
M5
x
60
x 4
F
x 4

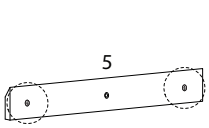
5

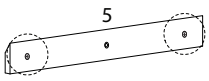
5

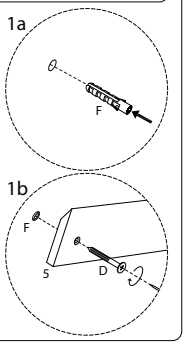
1a
F
1b
F
5
D

9

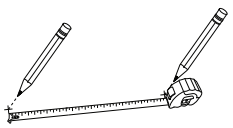

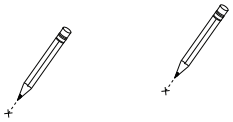

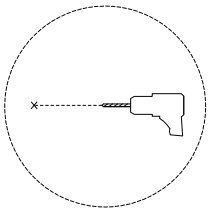

11

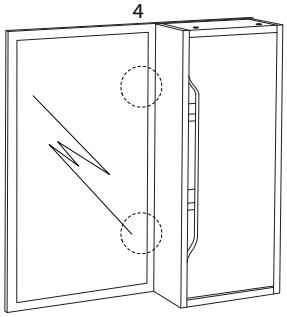
4

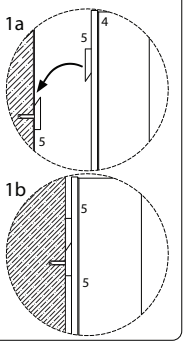
1a
5
4
5
1b
5
5

12

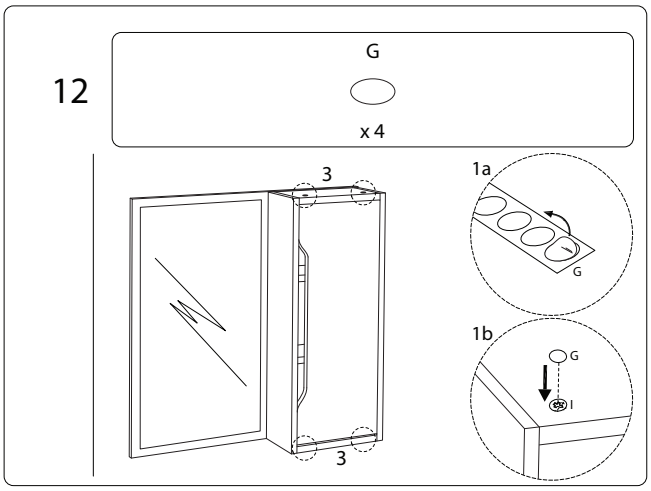

2364/PALMAS/190525/