KANSSELI

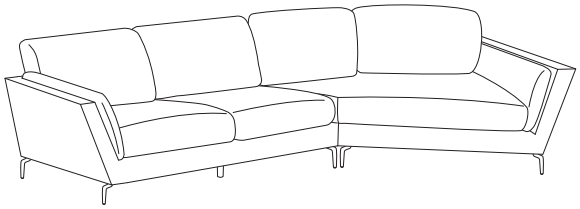

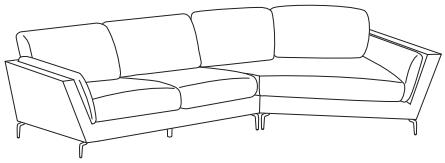

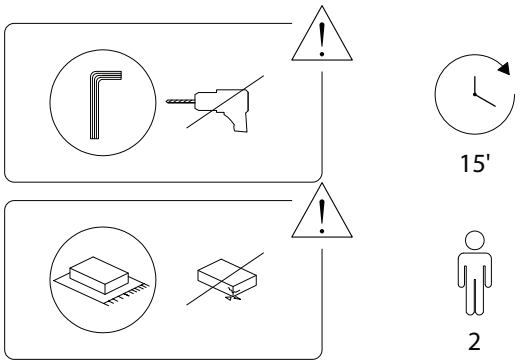

1/5

590/KANSSELI/301024/

A	B	C	D	E
x 1	x 1	x 2	x 1	x 1

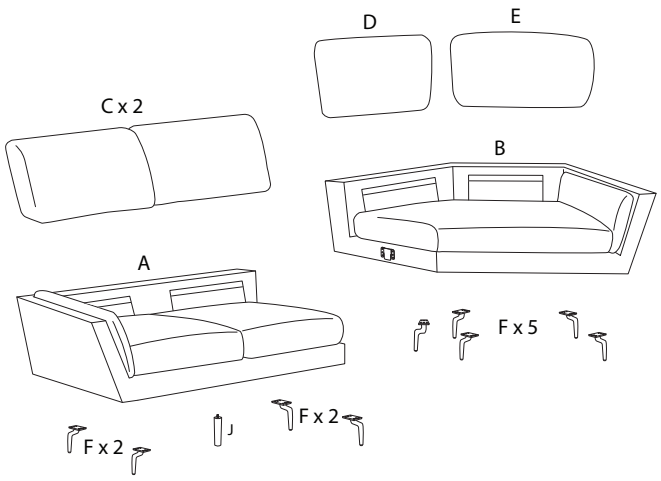

F	G	H	I	J
x 9	x 1	M6 x 23 x 18	x 1	x 1

2/5

590/KANSSELI/301024/

1

A	F	G	H	I	J
x 1	x 4	x 1	M6 x 23 x 8	x 1	x 1

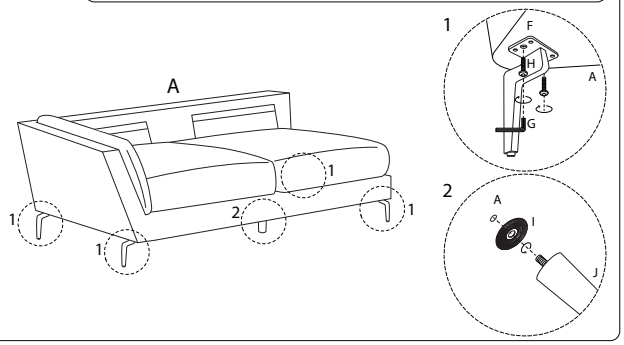

2

B	F	G	H
x 1	x 5	x 1	M6 x 23 x 10

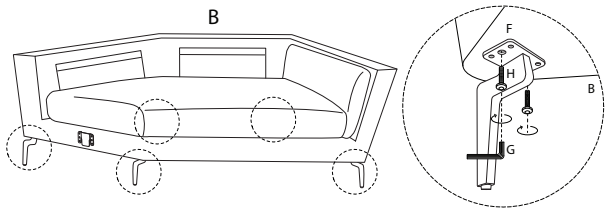

3/5

590/KANSSELI/301024/

3

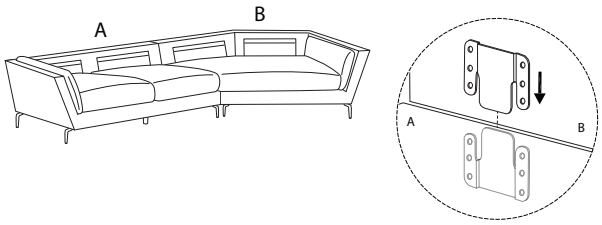

!

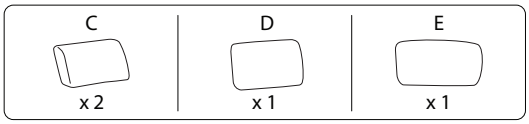

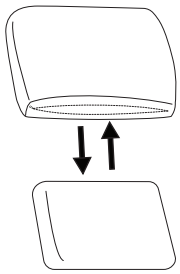

4

