CAMDEN

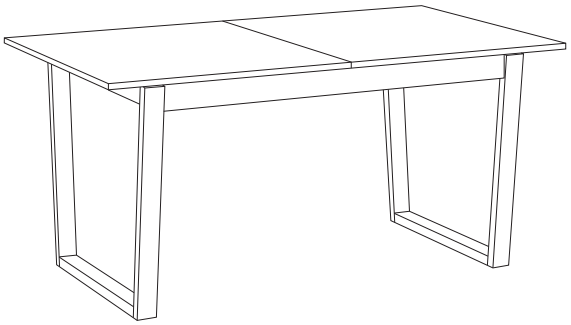

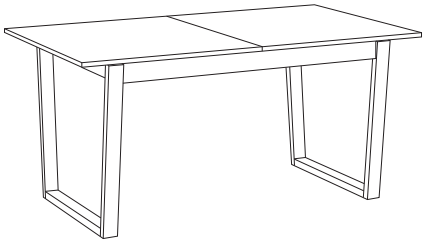

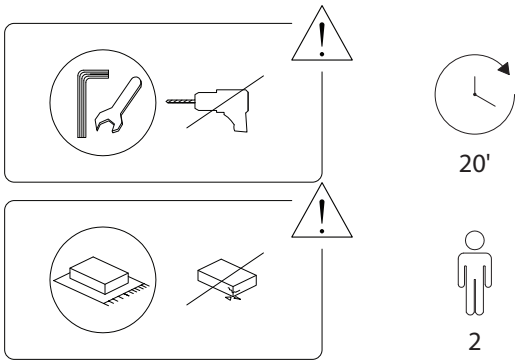

1/5

1762/CAMDEN/180825/

A	B	C	D
x 1	x 2	x 2	x 2

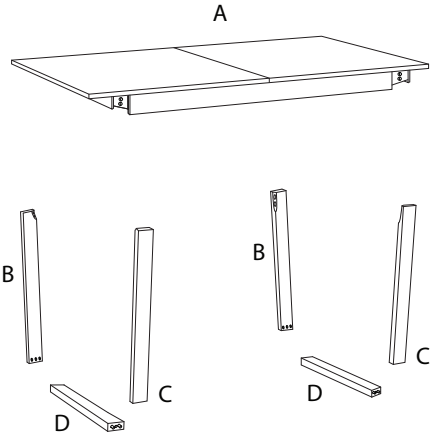

1	2	3	4	5	6
M8 x 65				M6 x 50	
x 8	x 8	x 12	x 1	x 4	x 1

2/5

1762/CAMDEN/180825/

1

A	B	C	1	2	3	4
			M8 x 65			
x 1	x 2	x 2	x 8	x 8	x 8	x 1

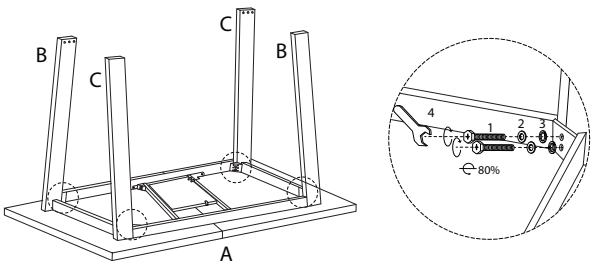

2

D	3	5	6
		M6 x 50	
x 2	x 4	x 4	x 1

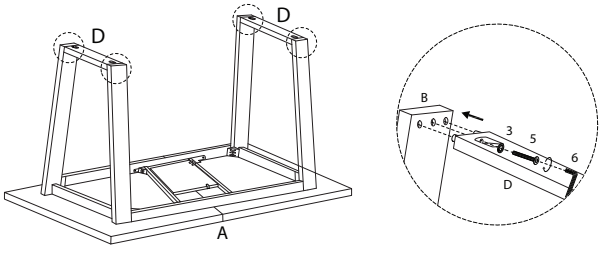

3/5

1762/CAMDEN/180825/

3

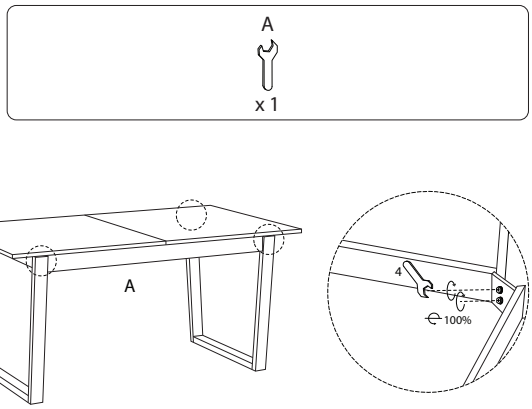

4

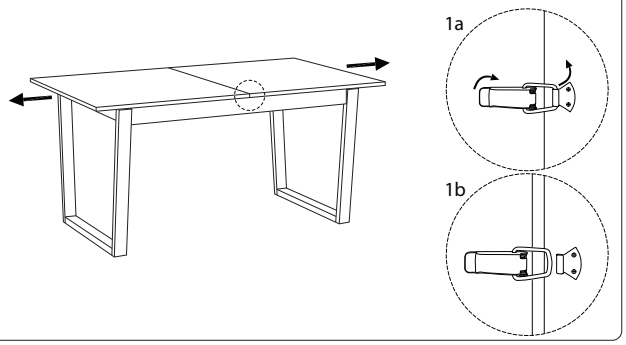

5

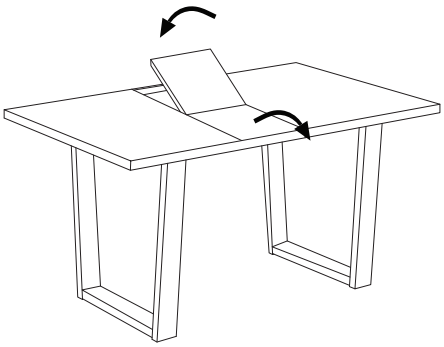

6

