# EDLAND

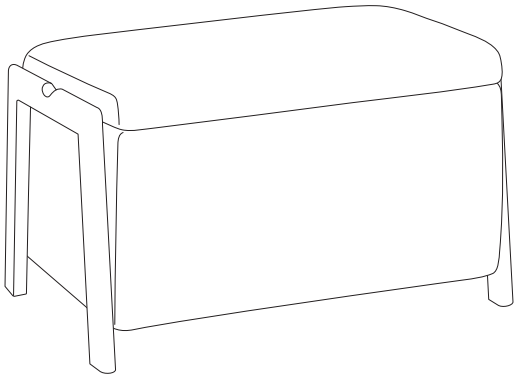

1/5

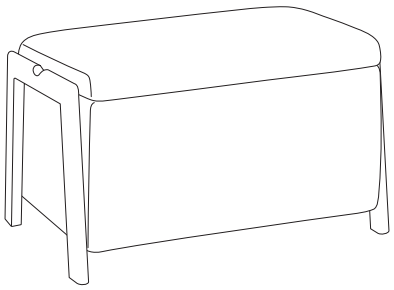

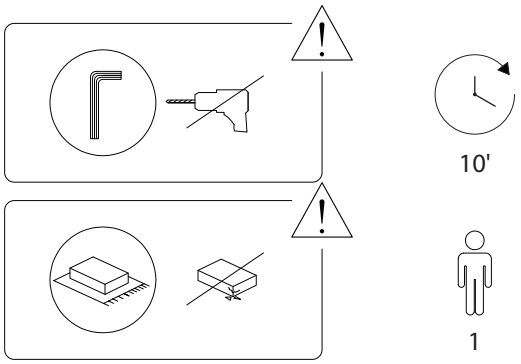


2/5



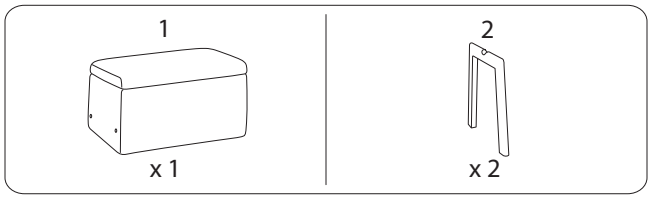


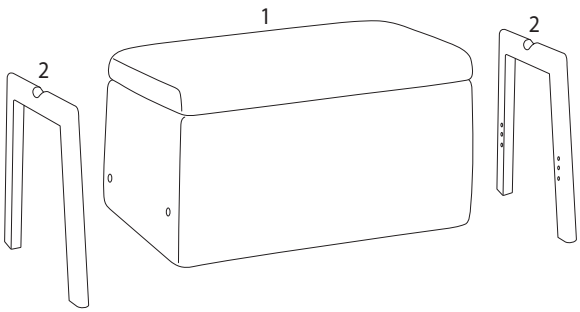


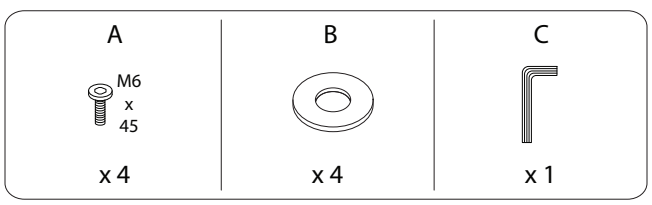


3/5



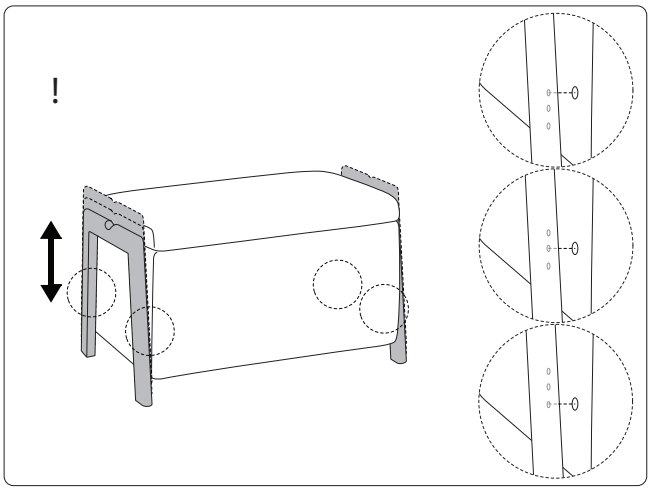


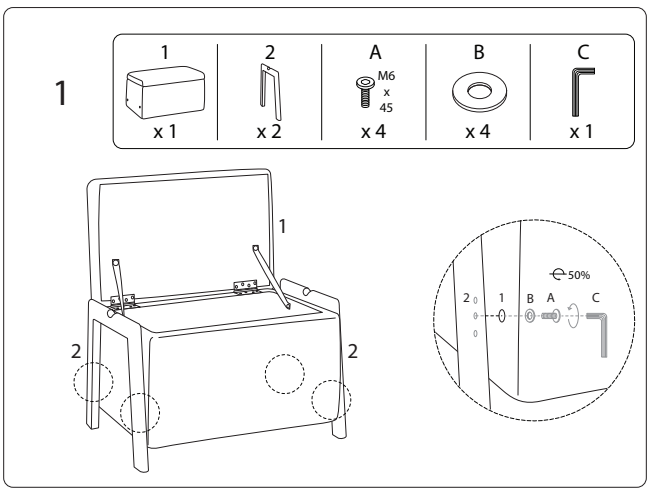


4/5

2

C

x 1

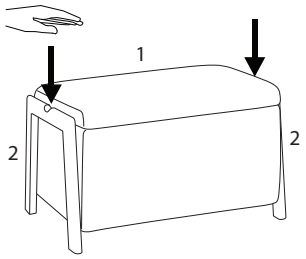


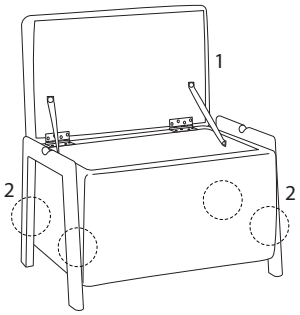


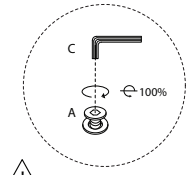


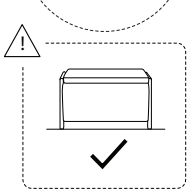

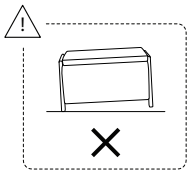



1500/EDLAND/230326/