# TOVIK



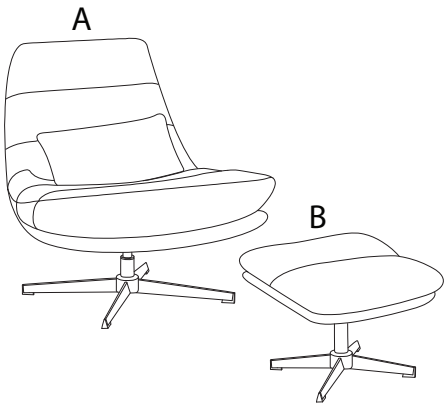


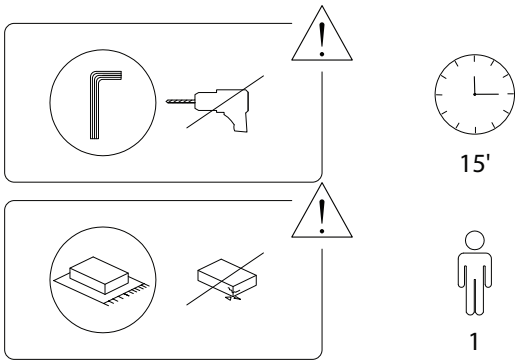


1/7



## A

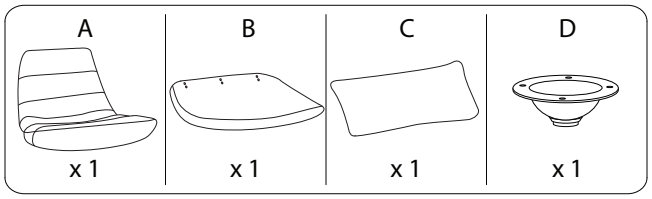


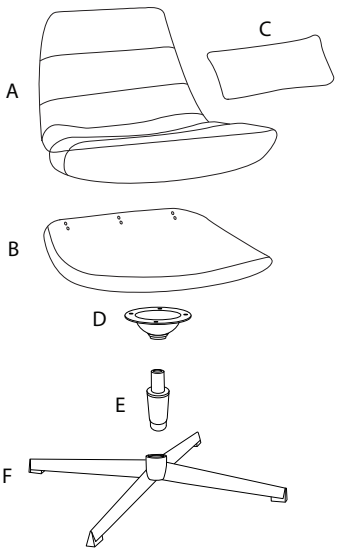


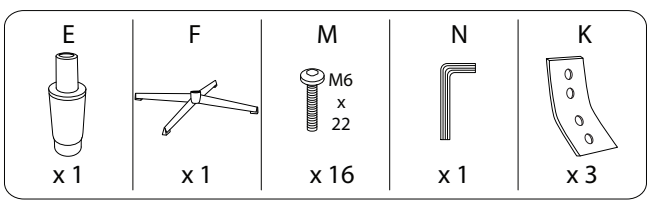


2/7



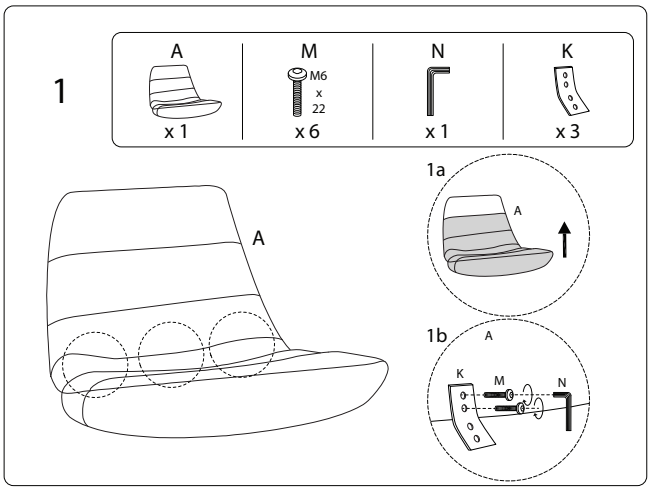


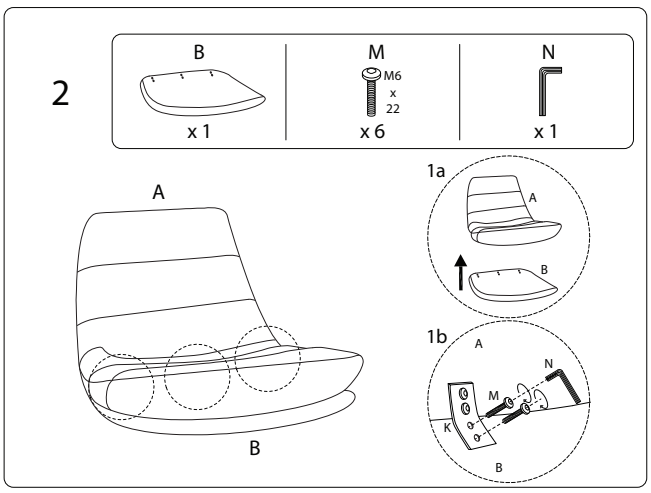


3/7

3

| D | M | N |
|---|---|---|
| x 1 | M6 x 22 x 4 | x 1 |

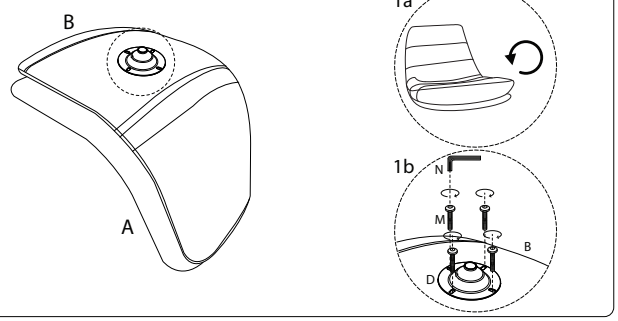


4

| E | F |
|---|---|
| x 1 | x 1 |

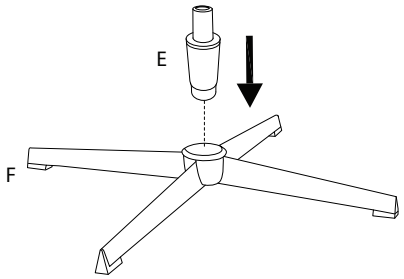


4/7

2196/TOVIK/300924/

5

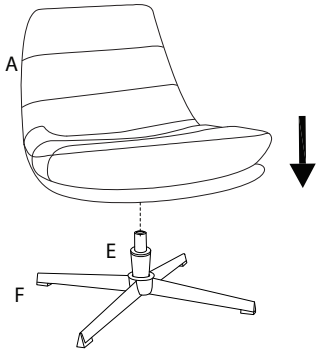


6

| C |
|---|
| x 1 |

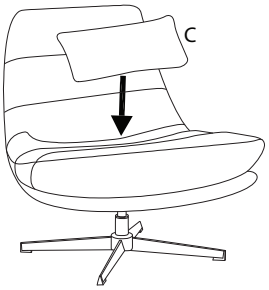


5/7

2196/TOVIK/300924/

B

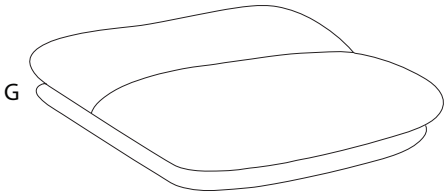


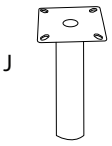


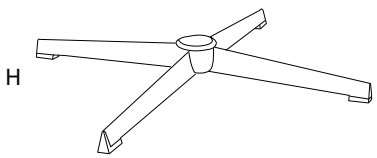


| G | H | J | L | N |
|---|---|---|---|---|
| x 1 | x 1 | x 1 | M6 x 18 x 4 | x 1 |

6/7

2196/TOVIK/300924/

1

| G | J | L | N |
|---|---|---|---|
| x 1 | x 1 | M6 x 18 x 4 | x 1 |

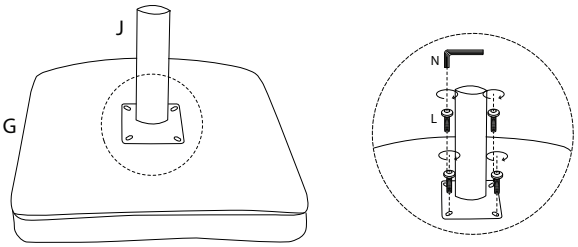


2

| H |
|---|
| x 1 |

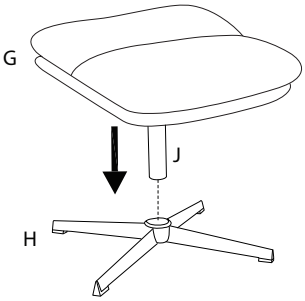


7/7

2196/TOVIK/300924/