LAMBRES

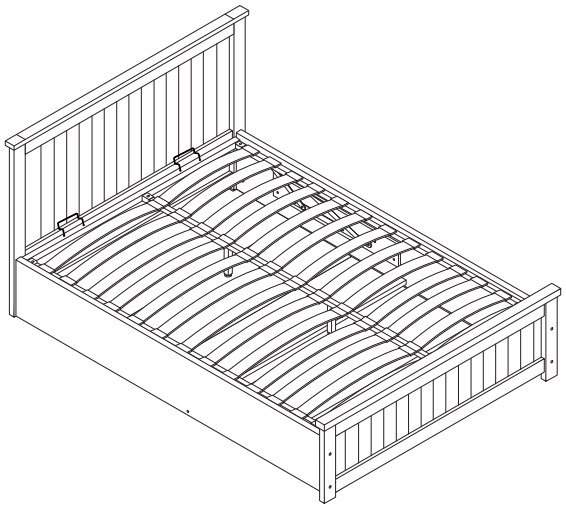

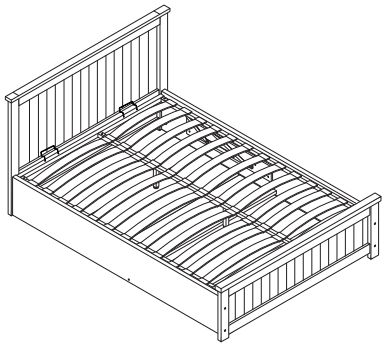

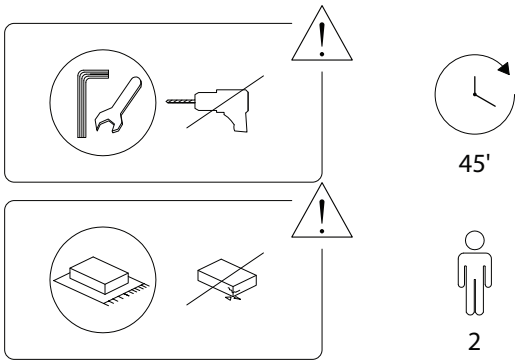

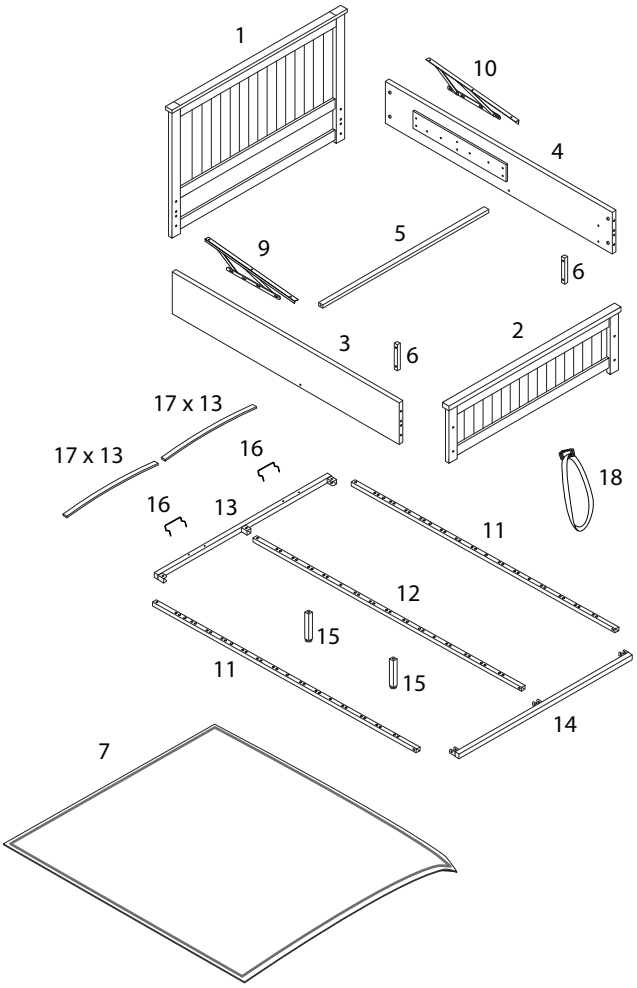

1  x 1	2 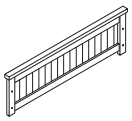 x 1	3 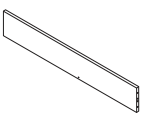 x 1	4 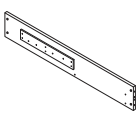 x 1
5 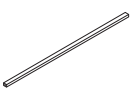 x 1	6  x 2	7 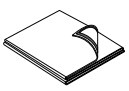 x 1	
9 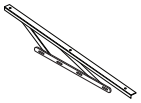 x 1	10 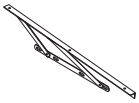 x 1	11  x 2	12  x 1
13 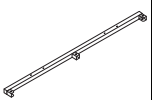 x 1	14 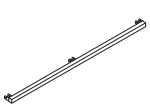 x 1	15  x 2	16  x 2
17 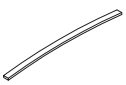 x 26	18  x 1	19 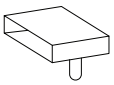 x 26	20 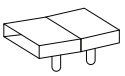 x 13

A	B	C	D
	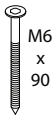		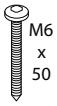
x 8	x 8	x 8	x 4
E	**F**	**G**	**H_1**
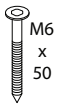			
x 2	x 14	x 12	x 8
H_2	**H_3**	**I**	**J**
			
x 8	x 8	x 1	x 1
K		**L**	
			
x 10		x 1	

1

3	4	A
x 1	x 1	x 8

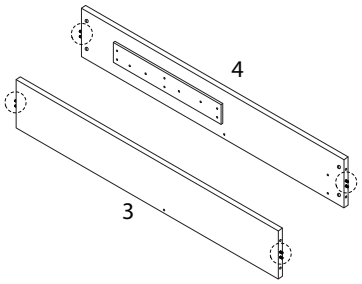

2

6	D	I
		
x 2	x 4	x 1

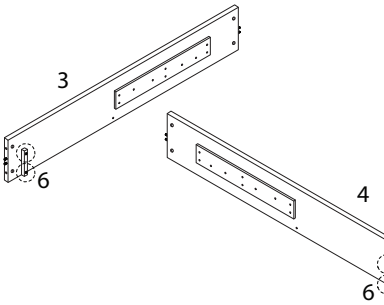

3

1	2	B	C	I
				
x 1	x 1	x 8	x 8	x 1

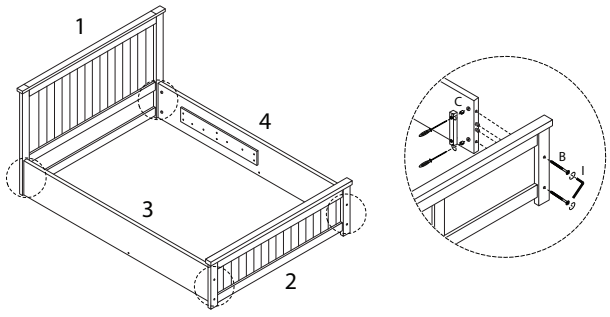

5

5	E	I
		
x 1	x 2	x 1

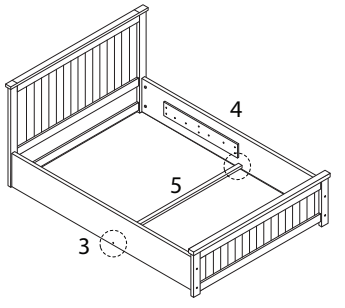

4

7

x 1

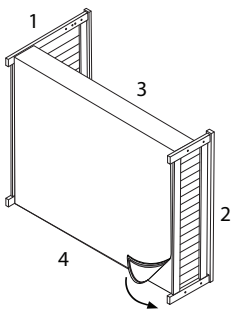

6

9	10	H_1	H_2	H_3	J
					
x 1	x 1	x 8	x 8	x 8	x 1

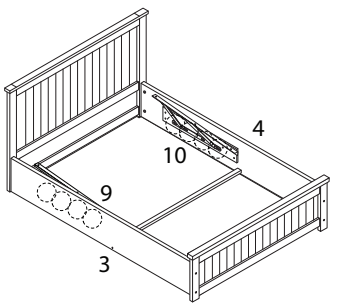

7

11	12	13	14
x 2	x 1	x 1	x 1

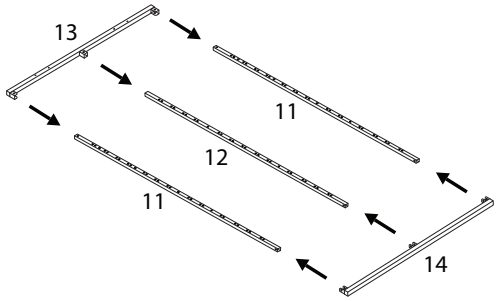

8

F	G	J	L
M8 x 50		M5	
x 6	x 6	x 1	x 1

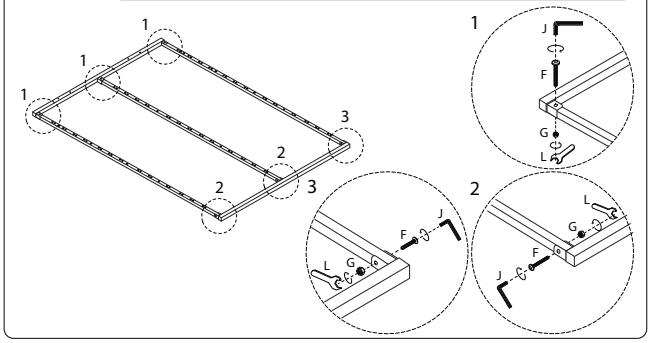

9

15	F	J
	M8 x 50	M5
x 2	x 2	x 1

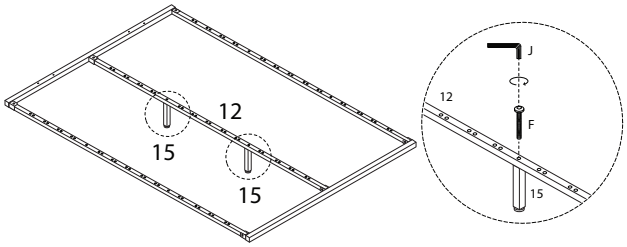

10

16
x 2

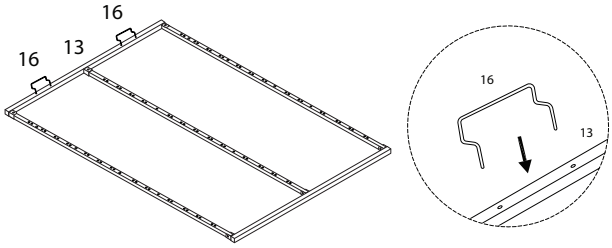

11

18
x 1

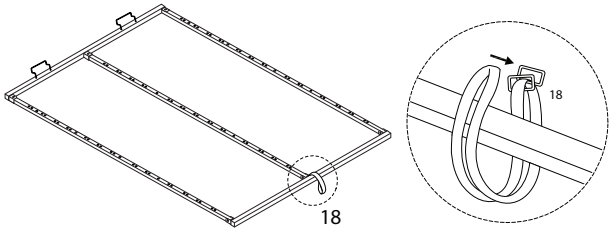

13

F	G	J	L
M8 x 50		M5	
x 6	x 6	x 1	x 1

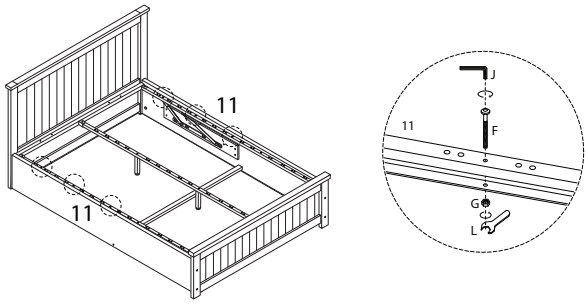

12

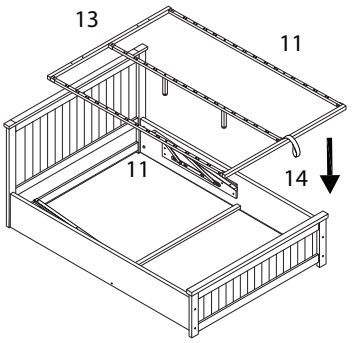

14

L
x 1

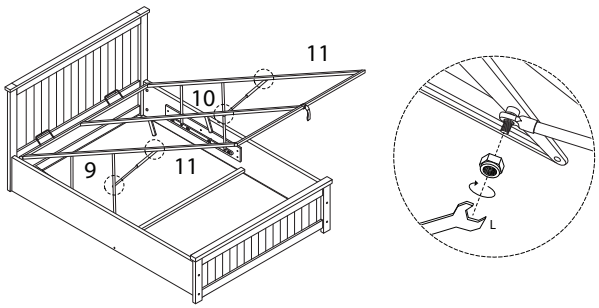

15 x 13

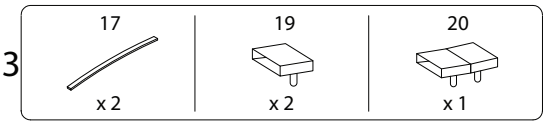

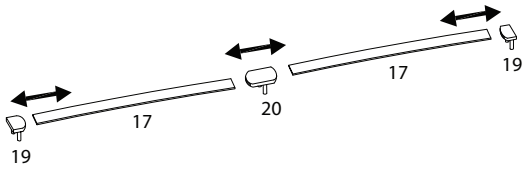

16

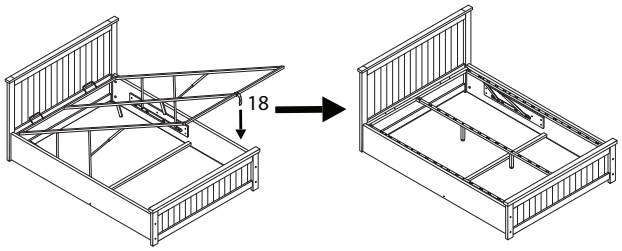

!

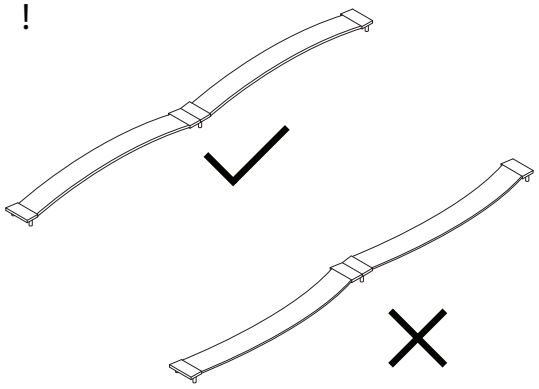

17

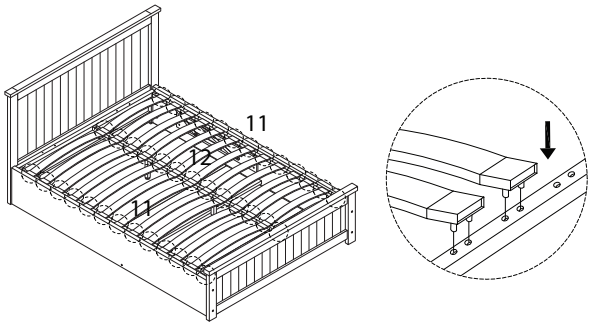

18

