CAMPAGNE

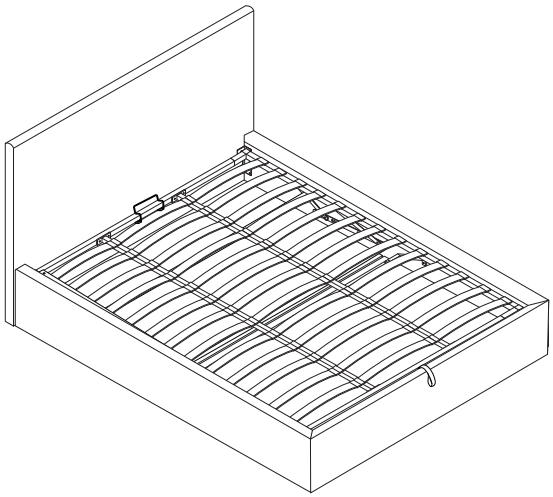

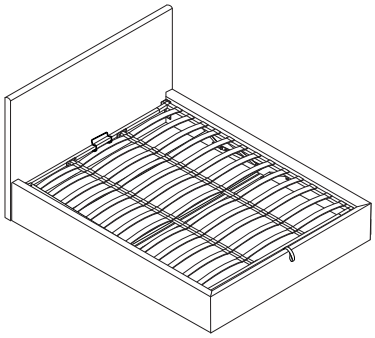

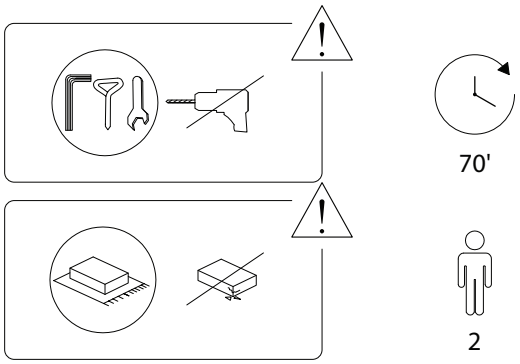
70'
2

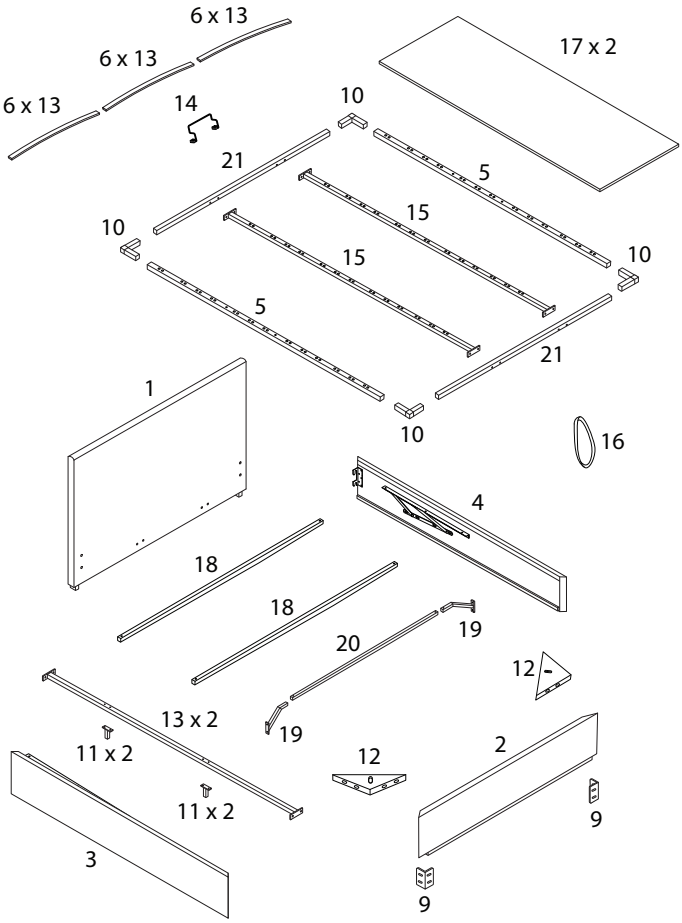
6 x 13
6 x 13
6 x 13
14
10
17 x 2
21
5
15
10
15
10
5
21
1
10
16
4
18
18
19
20
12
13 x 2
19
11 x 2
12
2
11 x 2
9
3
9

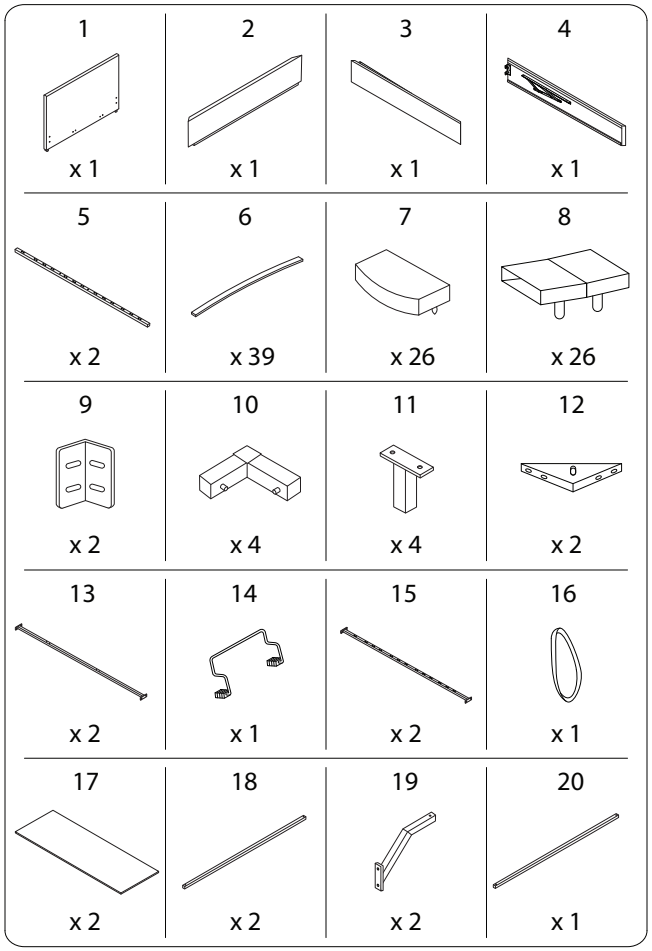
1
x 1
2
x 1
3
x 1
4
x 1
5
x 2
6
x 39
7
x 26
8
x 26
9
x 2
10
x 4
11
x 4
12
x 2
13
x 2
14
x 1
15
x 2
16
x 1
17
x 2
18
x 2
19
x 2
20
x 1

21		
x 2		
A M8 x 30 x 32	B M8 x 40 x 18	C x 22
D x 4	E x 4	F M5 x 1
G x 1	H M4 x 2	I_1 M6 x 20 x 2
I_2 M6 x 20 x 2	J M8 x 70 x 4	K x 1

!

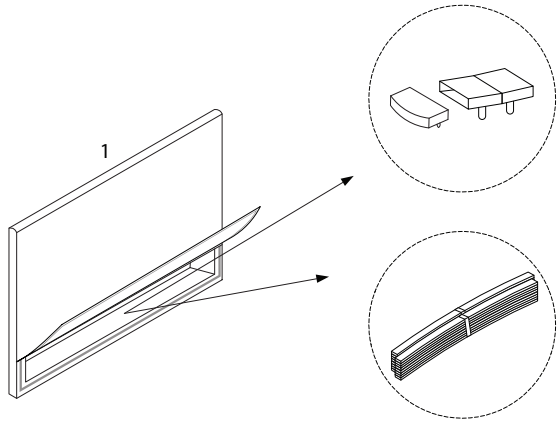

1

1	A	D	E	F
x 1	M8 x 30 x 4	x 4	x 4	M5 x 1

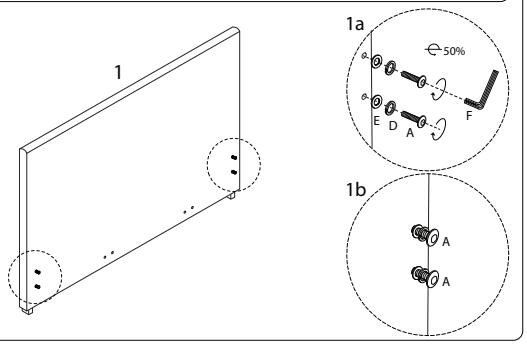

2

3	4	F
x 1	x 1	M5 x 1

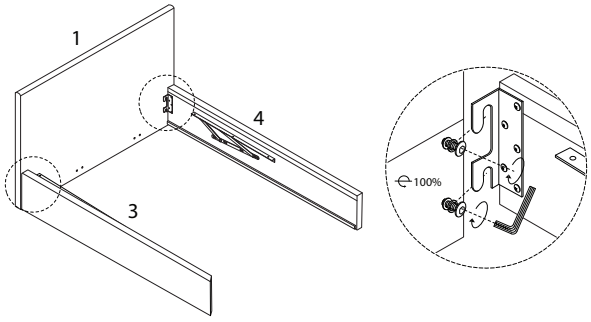

4

12	A	F
x 2	M8 x 30 x 8	x 1

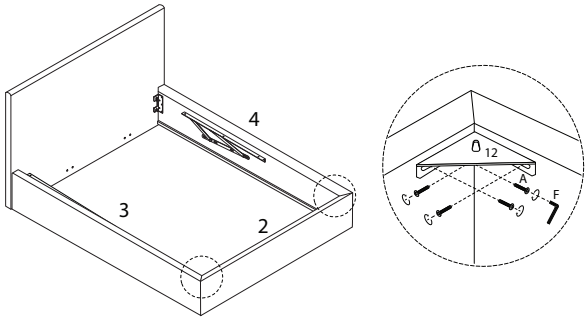

3

2	9	A	F
x 1	x 2	M8 x 30 x 8	M5 x 1

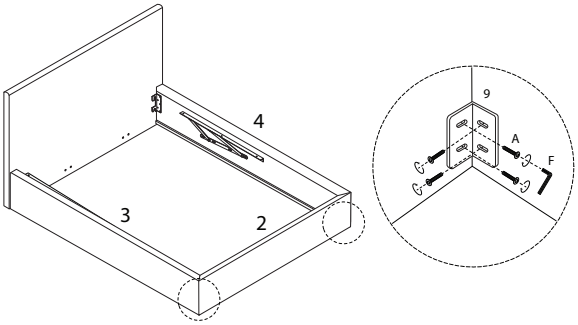

5 x 2

11	13	B	C	F	G
x 2	x 1	M8 x 40 x 4	x 4	M5 x 1	x 1

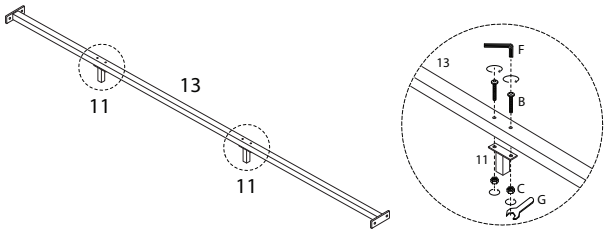

6

A	F
M8 x 30	M5
x 8	x 1

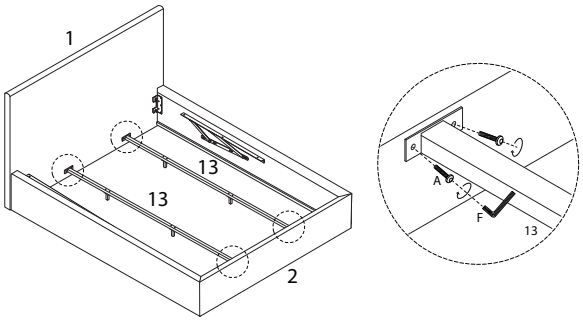

7

19	20	H	I1	I2
		M4	M6 x 20	M6 x 20
x 2	x 1	x 2	x 2	x 2

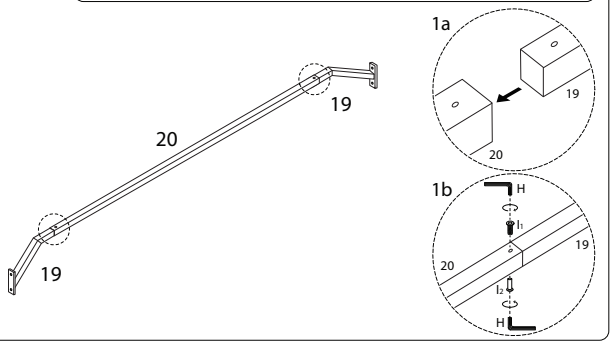

8

A	F
M8 x 30	M5
x 4	x 1

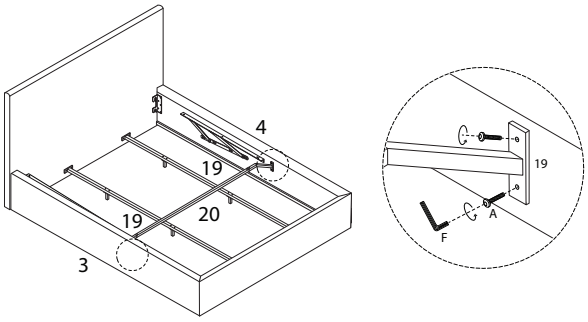

9

17
x 2

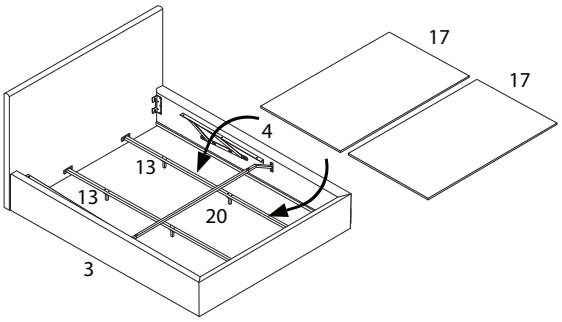

10

5	10	21
x 2	x 4	x 2

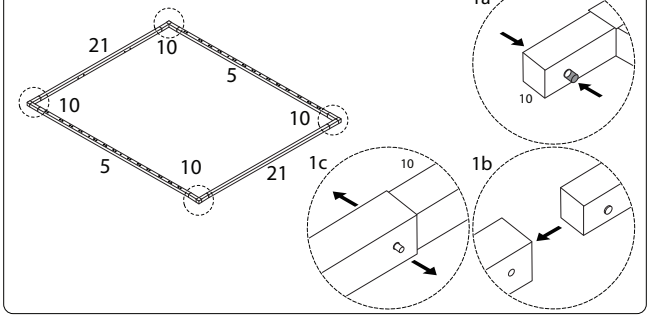

11

15	B	C	F	G
	M8 x 40		M5	
x 2	x 8	x 8	x 1	x 1

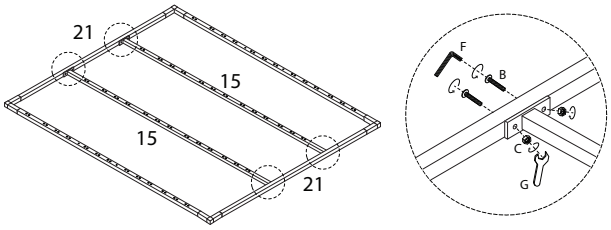

12

14
x 1

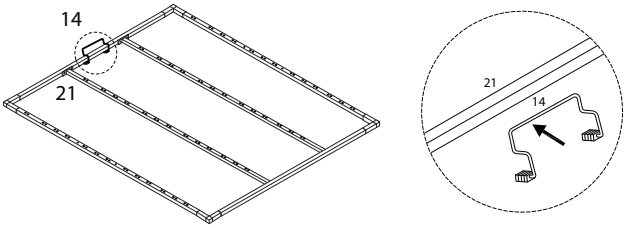

13

16
x 1

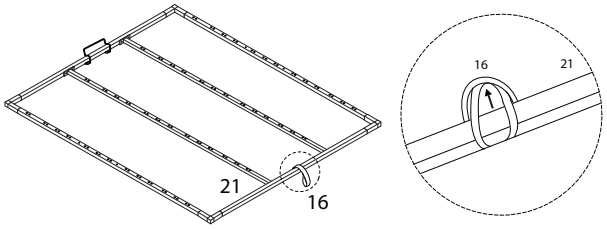

14

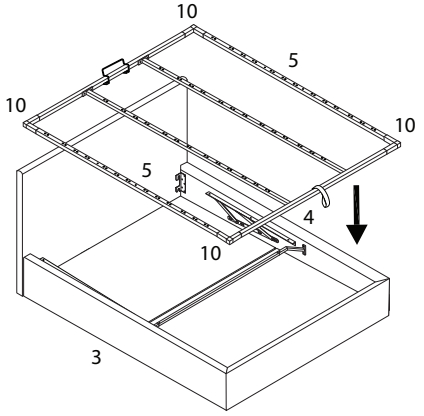

15

B	J	F
M8 x 40	M8 x 70	M5
x 2	x 4	x 1

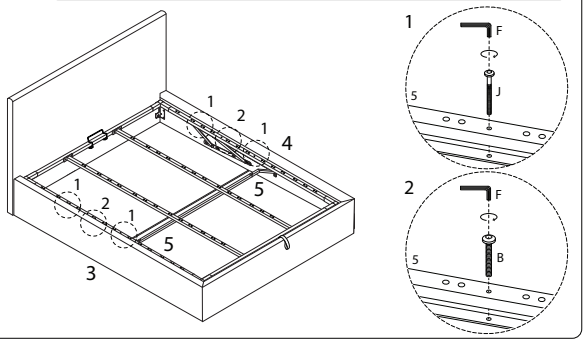

16

18	C	F	G
x 2	x 6	M5 x 1	x 1

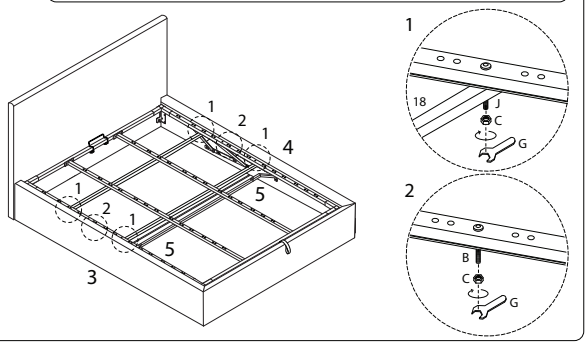

17

K
x 1

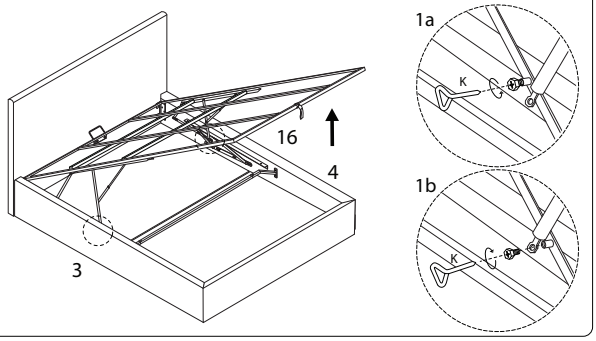

18 x 13

6	7	8
x 3	x 2	x 2

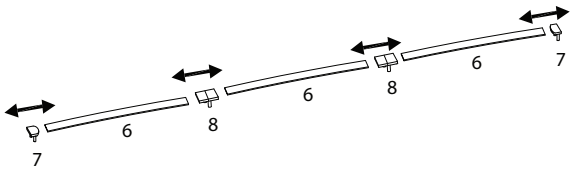

19

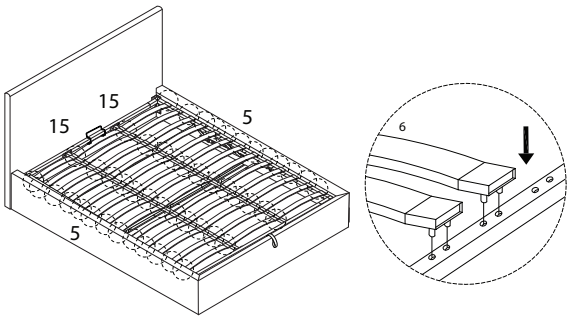
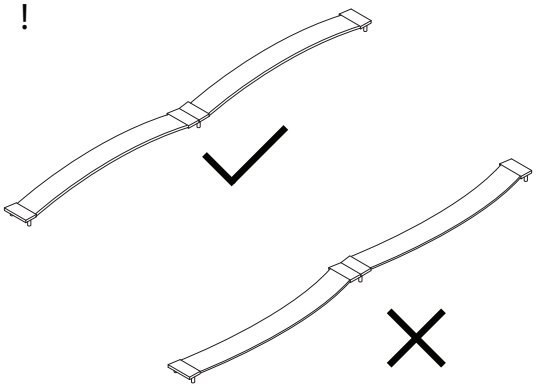
!