LUNAN

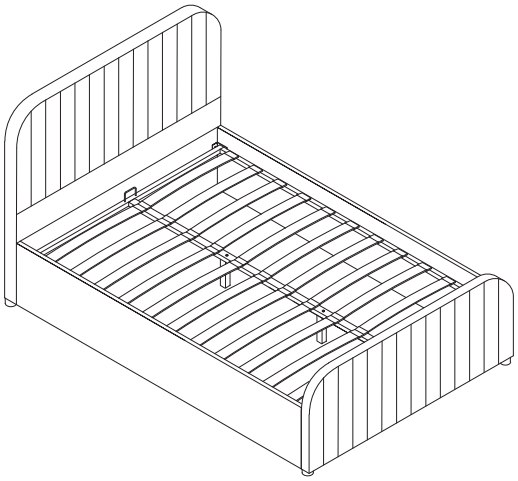

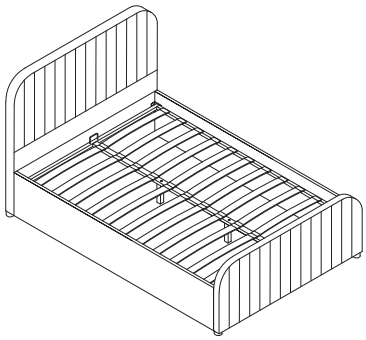

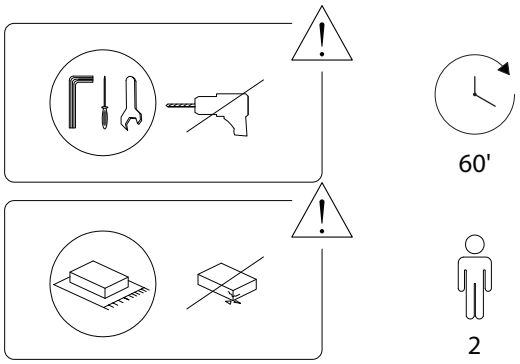

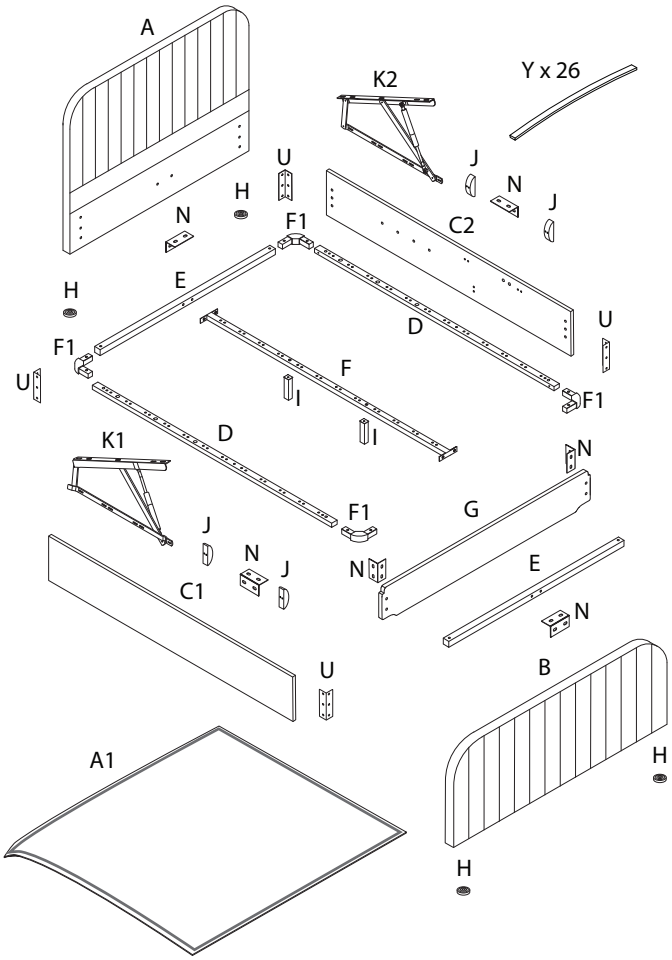

A 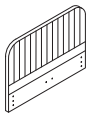 x 1	B x 1	C1 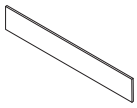 x 1
C2 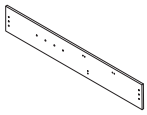 x 1	D 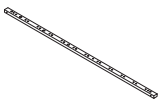 x 2	E 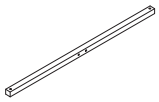 x 2
F 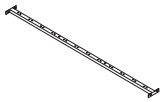 x 1	G 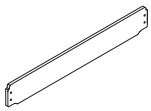 x 1	H 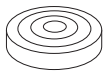 x 4
I x 2	J x 4	K1 x 1
K2 x 1	M x 2	N x 6

O	P	Q
x 1	M4 x 40 x 4	M8 x 50 x 2
R	**S**	**T**
M8 x 40 x 18	M8 x 20 x 36	x 2
U	**V**	**W**	**X**
x 4	x 18	x 4	x 13
Y	**Z**	**A1**
x 26	x 26	x 1
B1	**D1**	**E1**	**F1**
x 1	M4 x 20 x 8	M8 x 30 x 12	x 4

1

A	B	H	P
x 1	x 1	x 4	M4 x 40 x 4

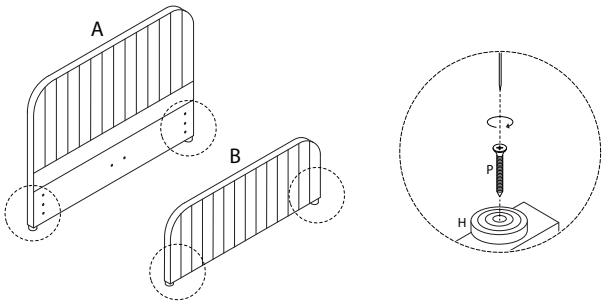

2

C1	C2	M	S	U	E1
x 1	x 1	x 1	M8 x 20 x 12	x 4	M8 x 30 x 12

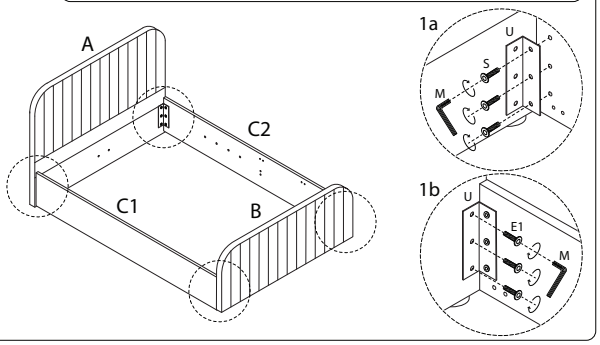

3

J	D1
x 4	M3 x 25 x 8

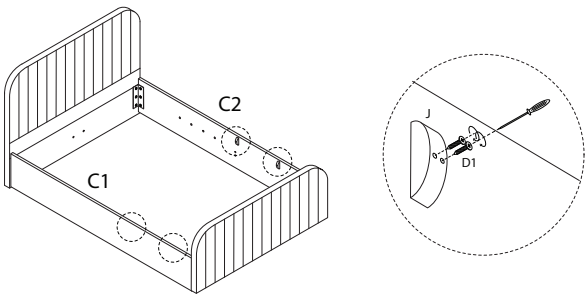

4

M	N	S
x 1	x 4	M8 x 20 x 8

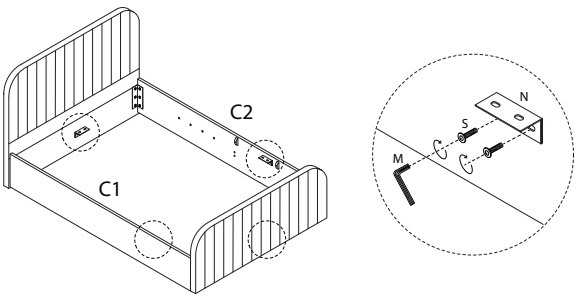

5

D	E	M	R	T	V	F1
x 2	x 2	x 1	M8 x 40 x 8	x 1	x 8	x 4

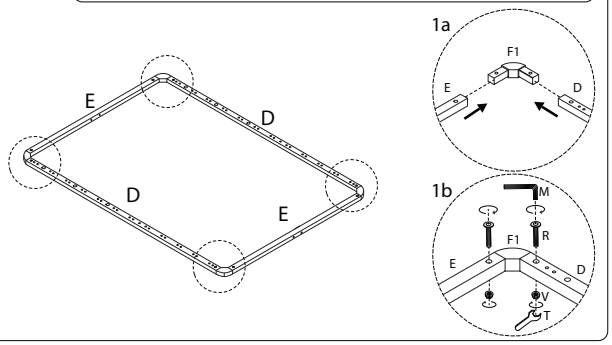

6

F	M	R	T	V
x 1	x 1	M8 x 40 x 4	x 1	x 4

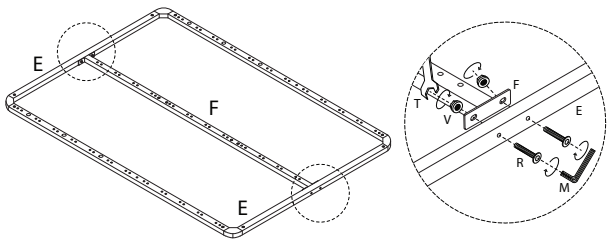

7

I	M	Q
x 2	x 1	M8 x 50 x 2

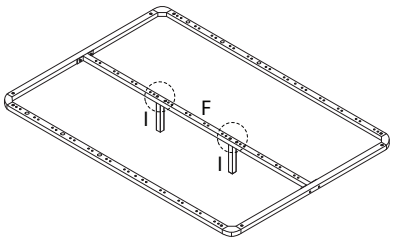

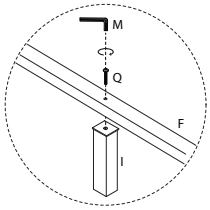

8

K1	K2	M	S
x 1	x 1	x 1	M8 x 20 x 8

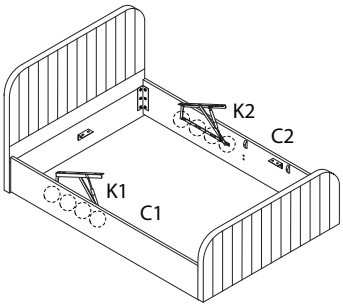

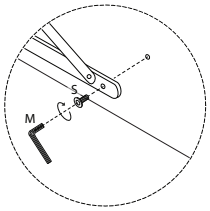

9

W
x 4

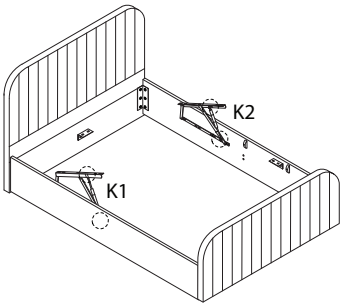

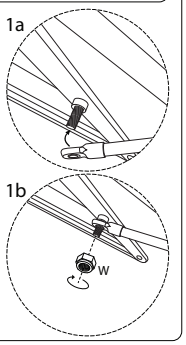

10

M	R	T	V
x 1	M8 x 40 x 6	x 1	x 6

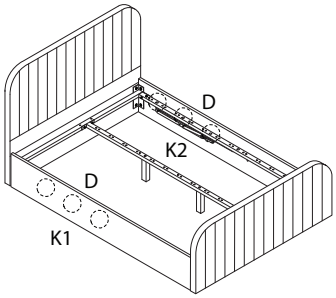

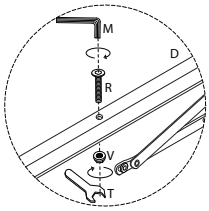

11

O
x 1

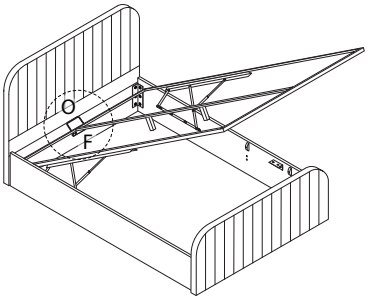

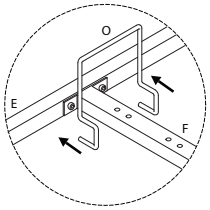

12

B1
x 1

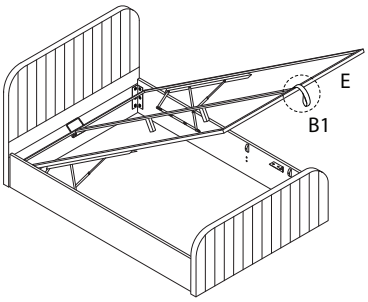

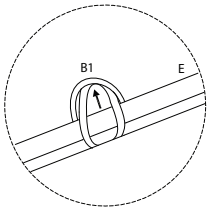

13

A1
x 1

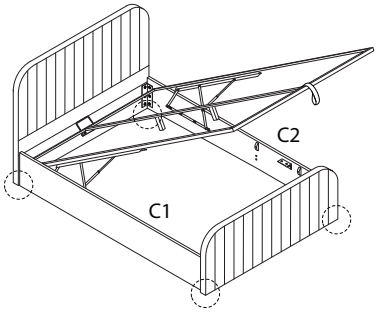

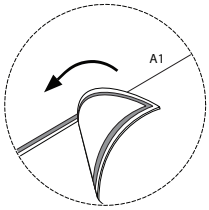

14

G	M	N	S
x 1	x 1	x 2	M8 x 20 x 4

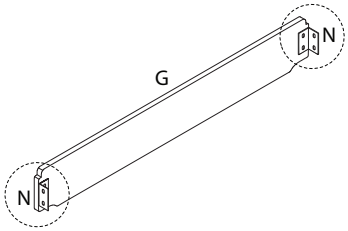

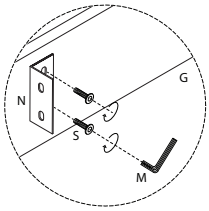

15

M	S
x 1	M8 x 20 x 4

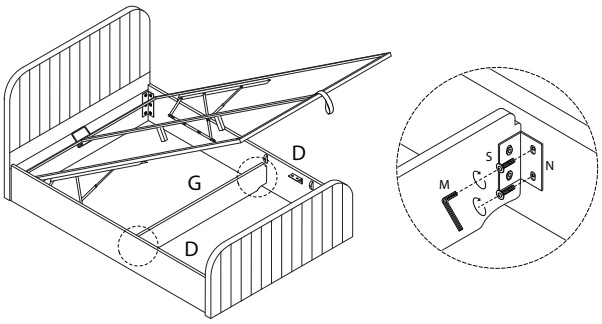

!

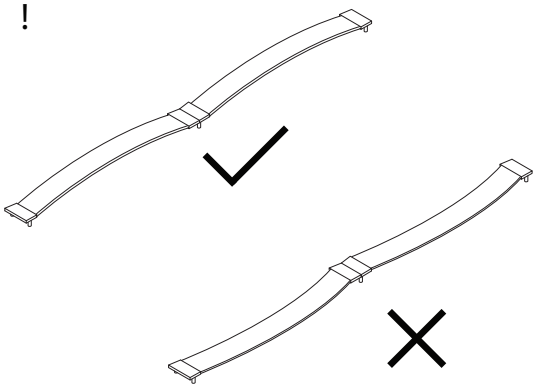

16 x 13

X	Y	Z
x 1	x 2	x 2

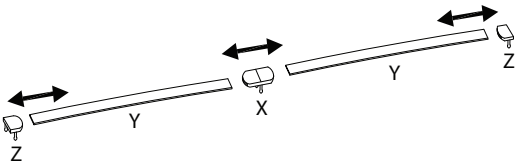
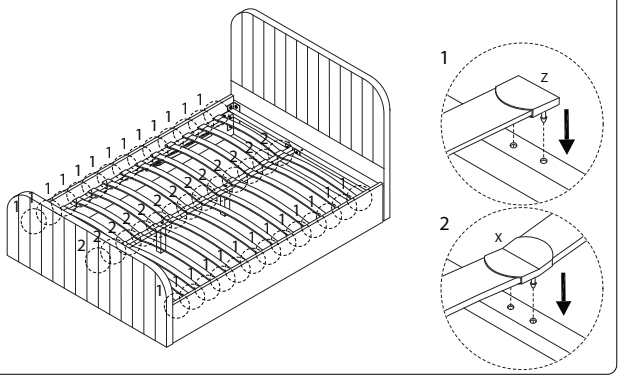
!