MIMILI

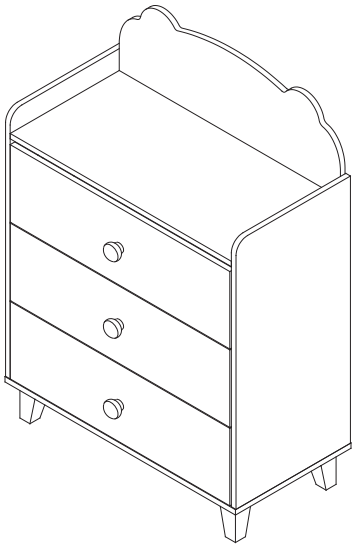

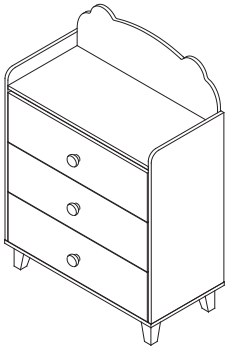

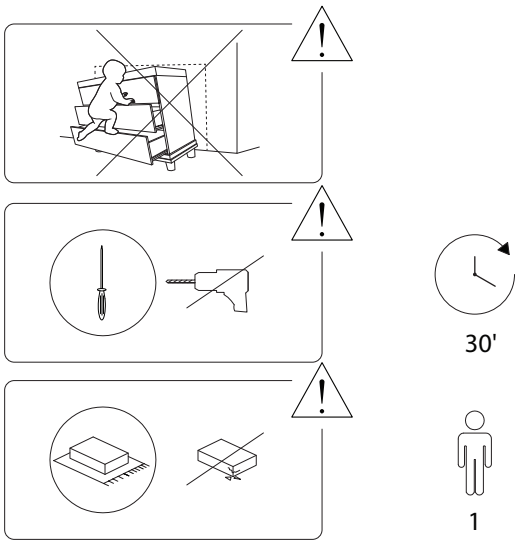

2341/MIMILI/121026

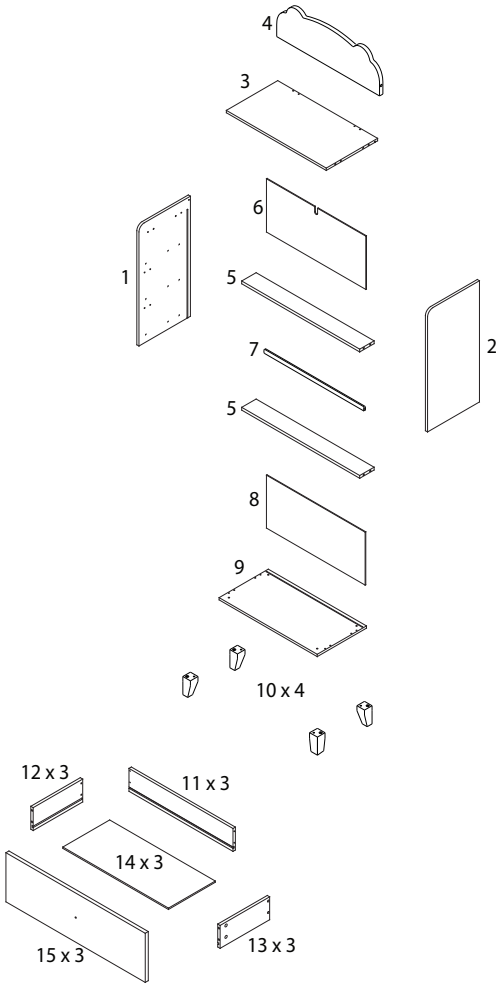

2341/MIMILI/121026

1  x 1	2  x 1	3 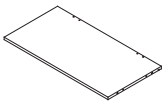 x 1
4 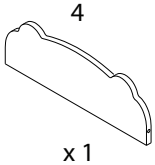 x 1	5 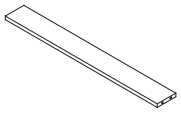 x 2	6 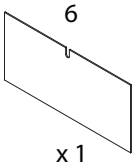 x 1
7 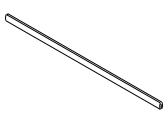 x 1	8 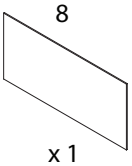 x 1	9 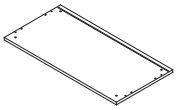 x 1
10  x 4	11 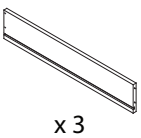 x 3	12  x 3
13  x 3	14 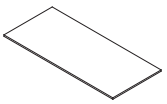 x 3	15 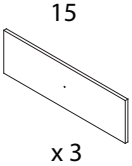 x 3

2341/MIMILI/121026

A	B	C
		
x 28	x 28	x 14
CL	**CR**	**D**
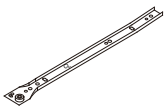	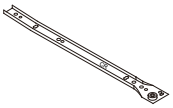	 M4 x 12
x 3	x 3	x 30
DL	**DR**	**E**
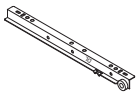	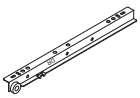	 M3 x 12
x 3	x 3	x 1
F	**G**	**H**
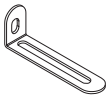	 M6 x 20	 M4 x 35
x 1	x 4	x 16
I	**J**	
 M4 x 20		
x 3	x 3	

1

1	2	3	A
x 1	x 1	x 1	x 16

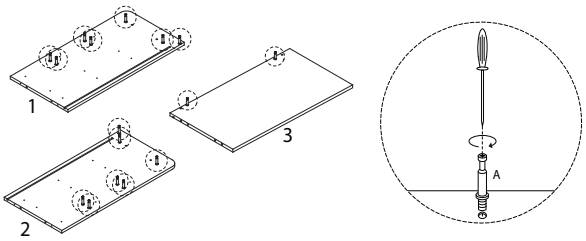

2

CL	CR	D
x 3	x 3	M4 x 12 x 18

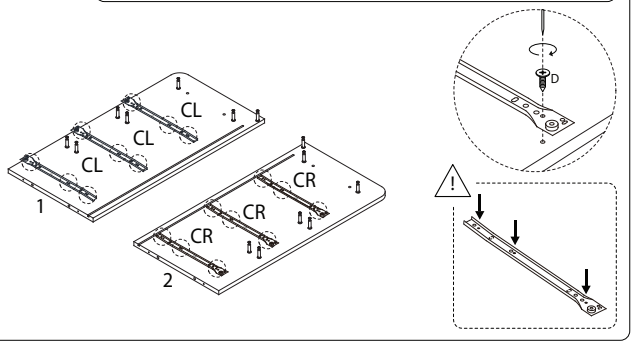

3

4	C
x 1	x 2

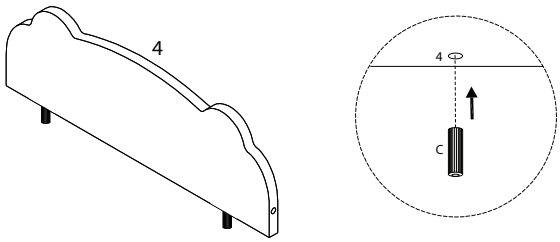

5

C
x 4

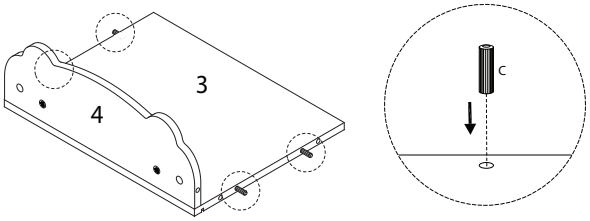

4

B
x 2

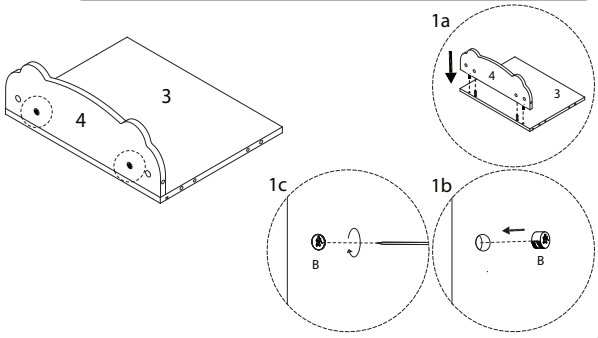

6

B
x 3

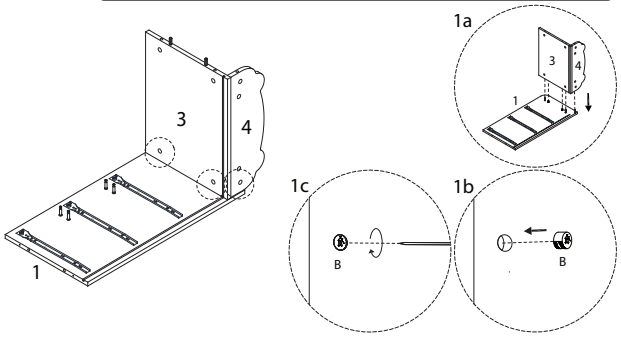

7

5 x 2

B x 4

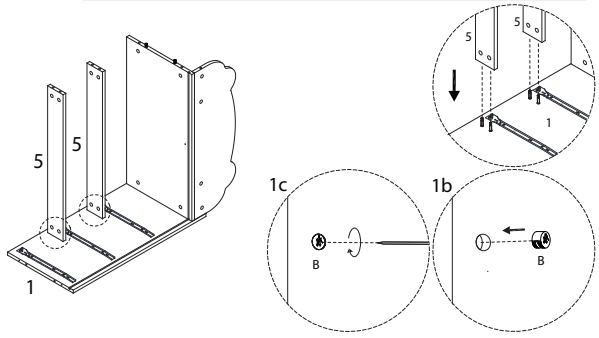

8

2 x 1

B x 7

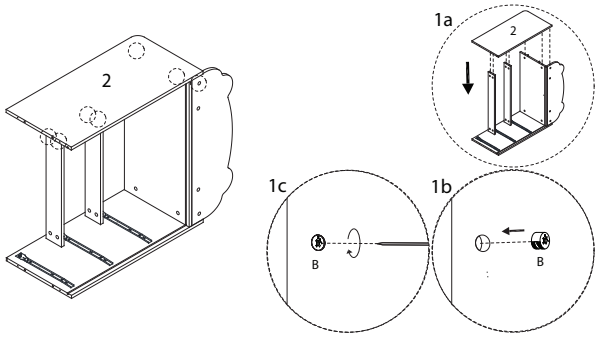

9

E M3 x 12 x 1

F x 1

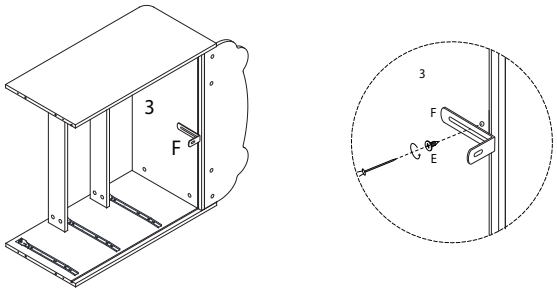

10

6 x 1

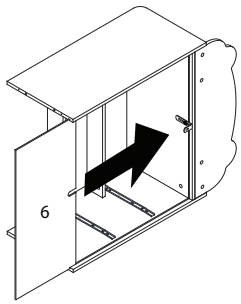

11

7 x 1

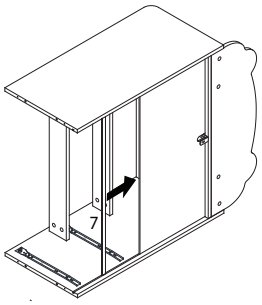

12

8 x 1

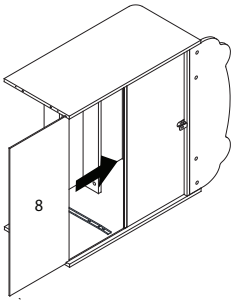

13

9 x 1

C x 4

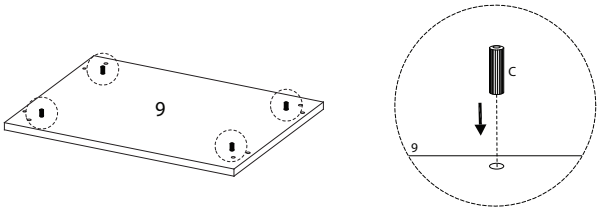

14

10 x 4

G M6 x 20 x 4

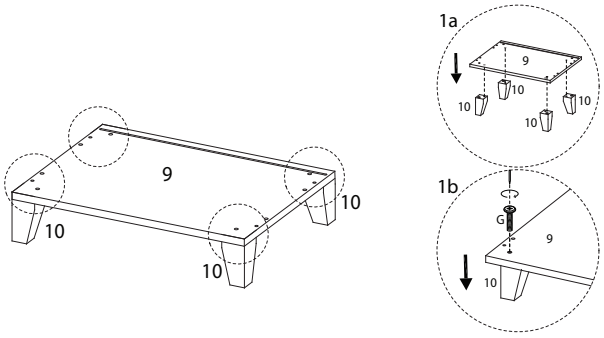

15

C
x 4

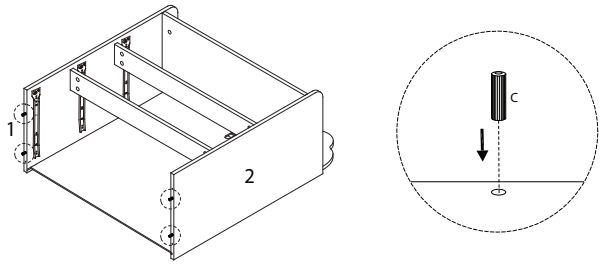

16 x 3

11
x 1

12
x 1

13
x 1

H
M4 x 35
x 4

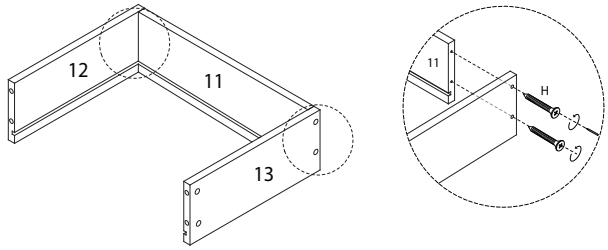

17 x 3

14
x 1

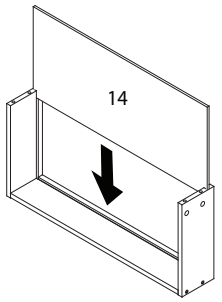

18 x 3

15
x 1

A
x 4

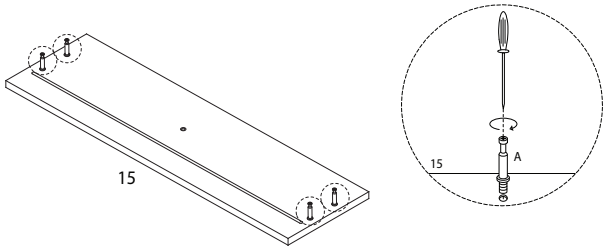

19 x 3

B
x 4

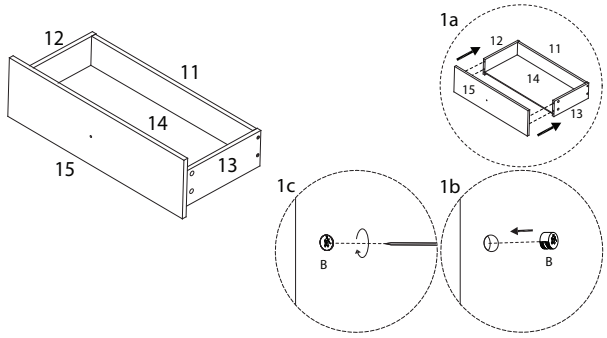

21 x 3

D
M4 x 12
x 4

DL
x 1

DR
x 1

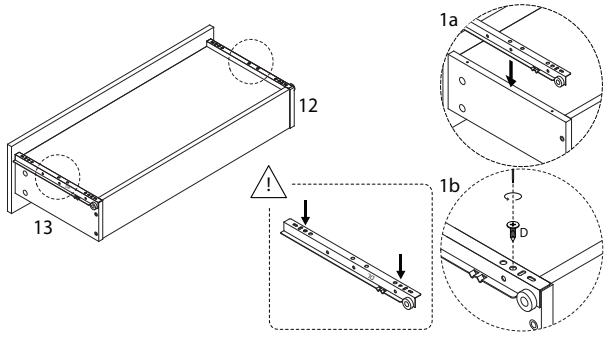

20 x 3

J
x 1

I
M4 x 20
x 1

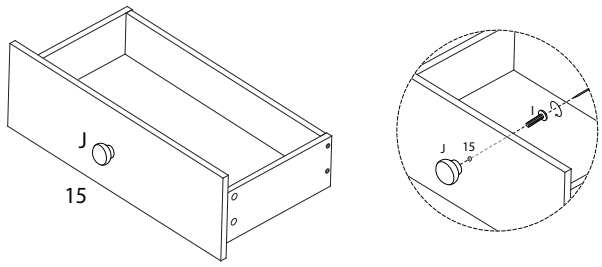

22

