ETER

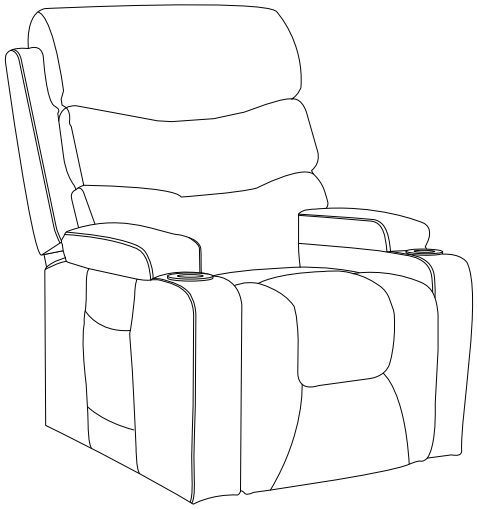

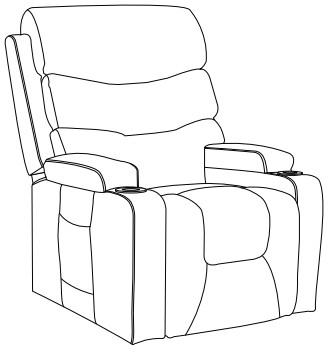

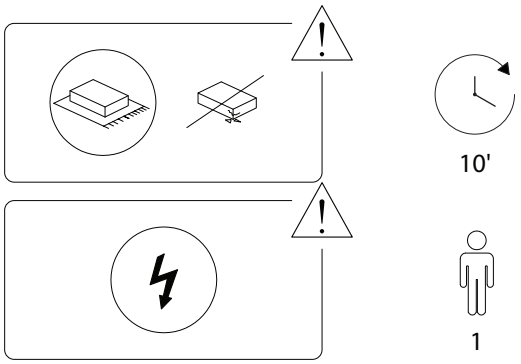

1/7

2517/ETER/100925/

1	2
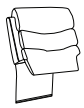	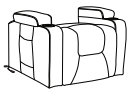
x 1	x 1

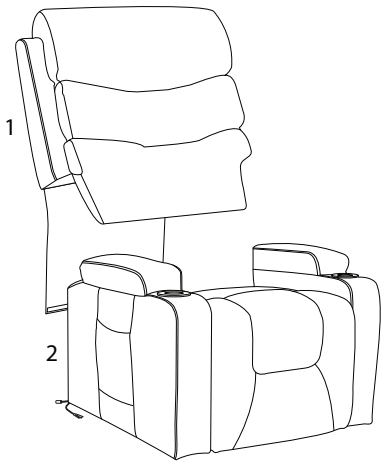

A	B	C	D
	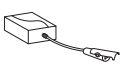		
x 1	x 1	x 1	x 1

2/7

2517/ETER/100925/

1

1	2
	
x 1	x 1

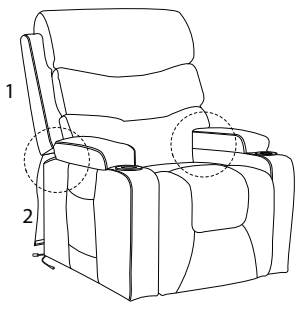

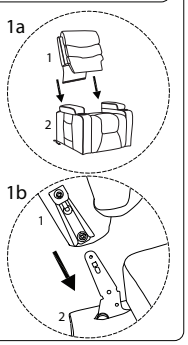

2

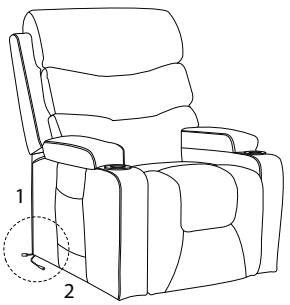

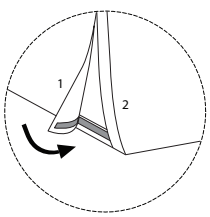

3/7

2517/ETER/100925/

3

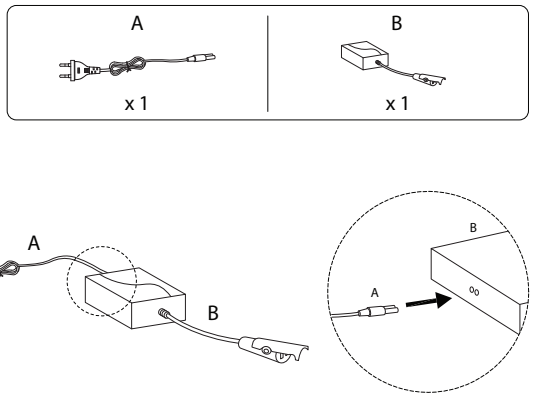

4

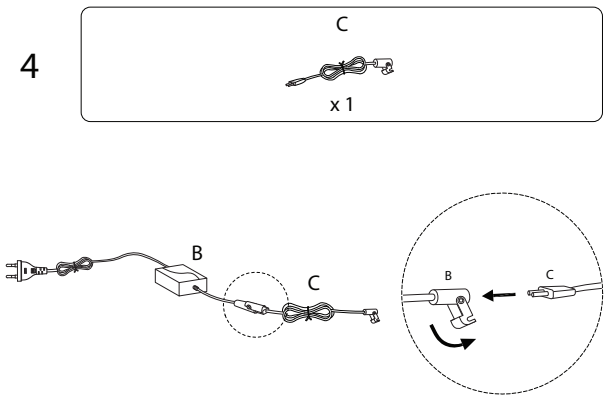

4/7

2517/ETER/100925/

5

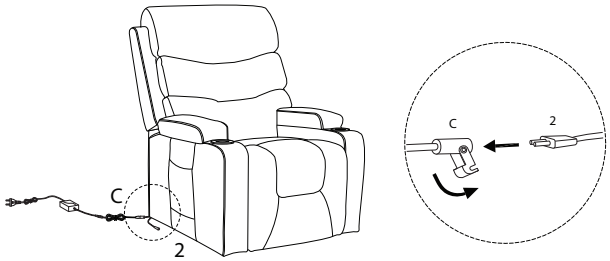

6

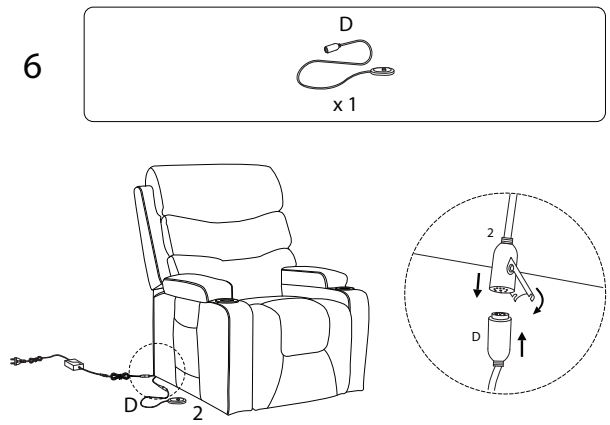

5/7

2517/ETER/100925/

7

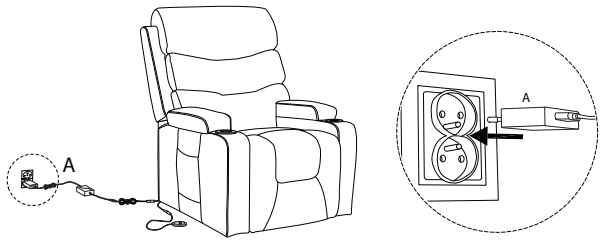

!

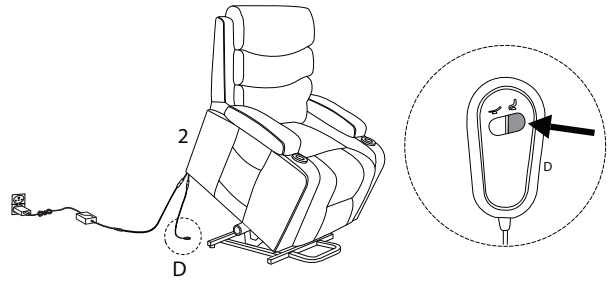

!

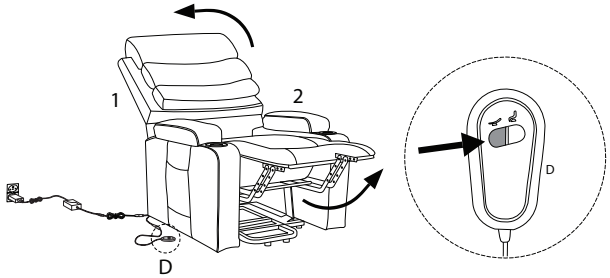

6/7

2517/ETER/100925/

7/7

2517/ETER/100925/