ATHLETE

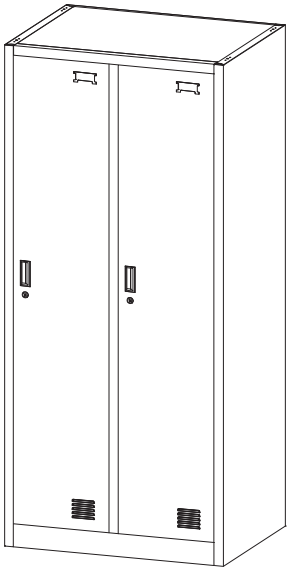

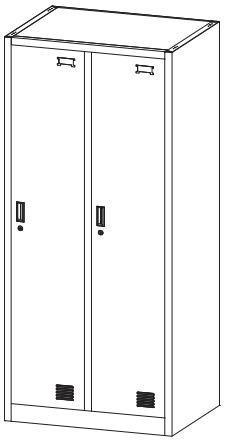

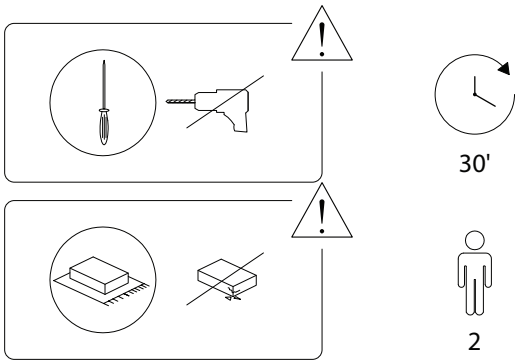

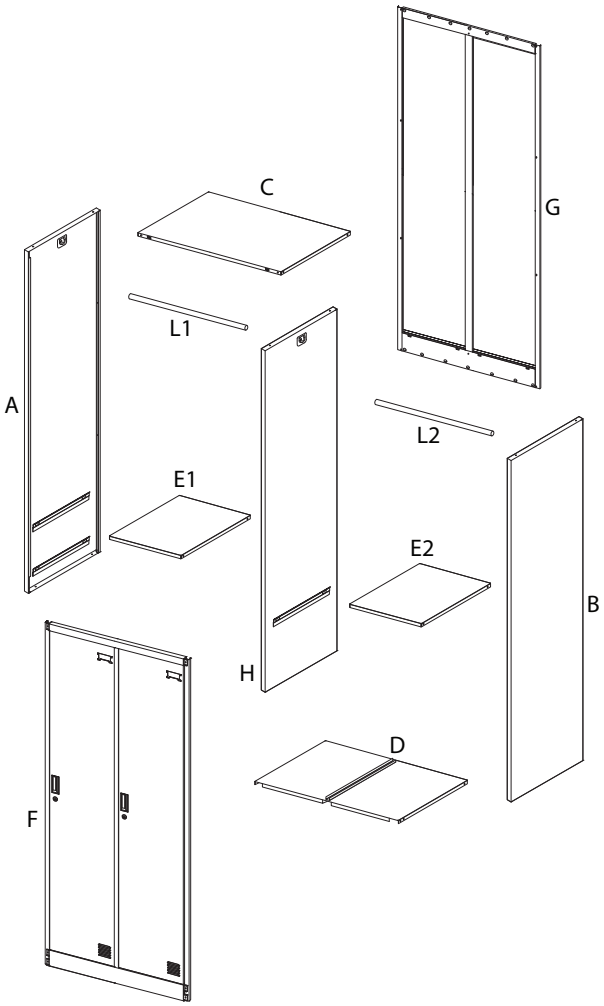

A  x 1	B  x 1	C  x 1
D 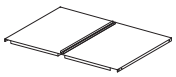 x 1	E1 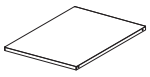 x 1	E2 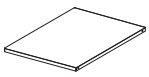 x 1
F  x 1	G 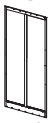 x 1	H  x 1
J  x 21	K  x 2	L1  x 1
L2 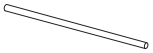 x 1	M  x 4	N  x 2

1

A	G	J
x 1	x 1	M5 x 12 x 3

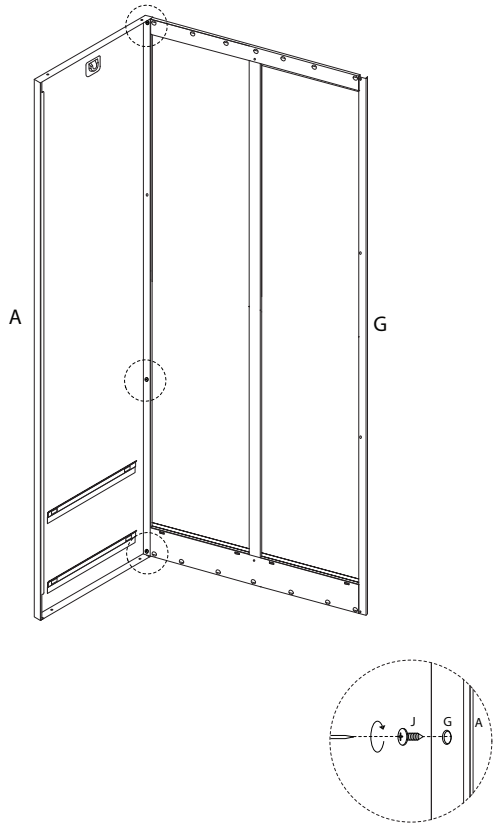

2

B	J
x 1	M5 x 12 x 3

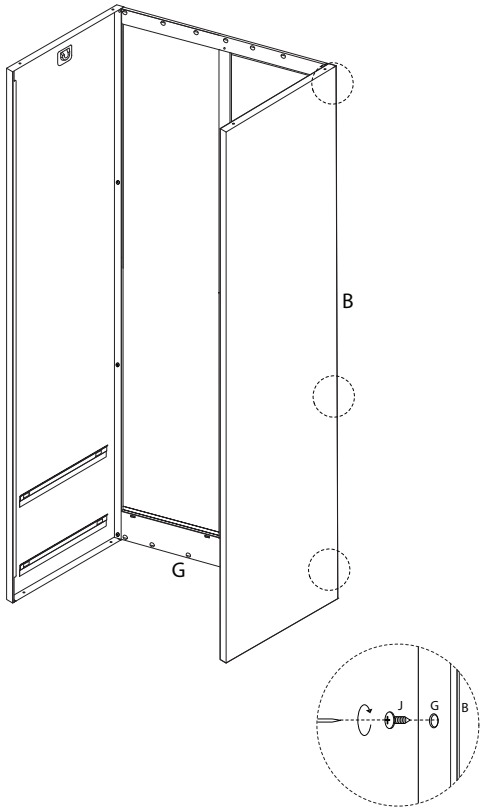

3

F
x 1

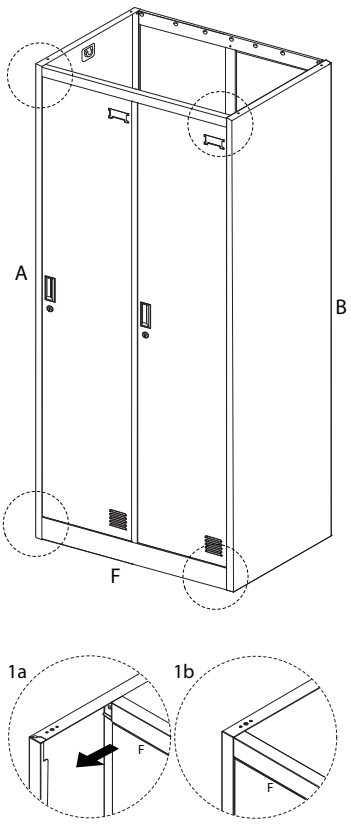

4

D	J
x 1	M5 x 12 x 1

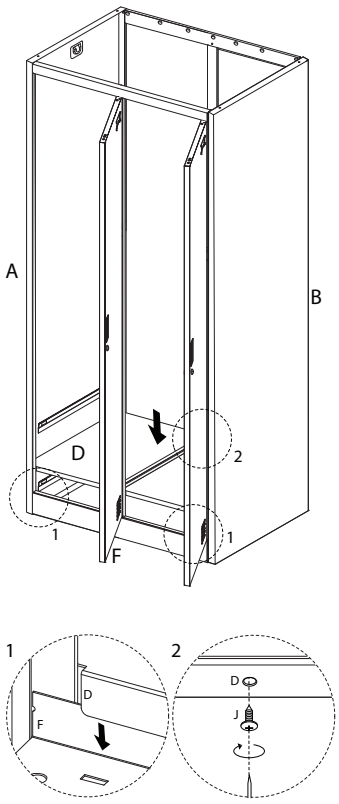

5

C x 1 | J M5 x 12 x 6

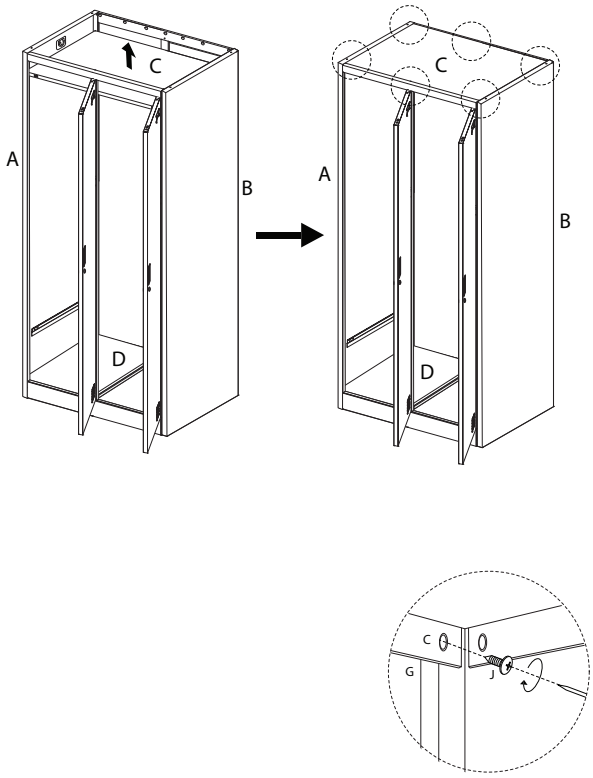

6

H x 1 | J M5 x 12 x 8

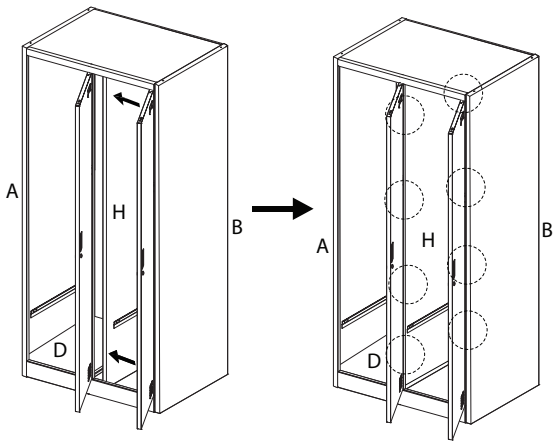

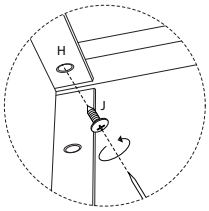

7

E1 x 1 | E2 x 1

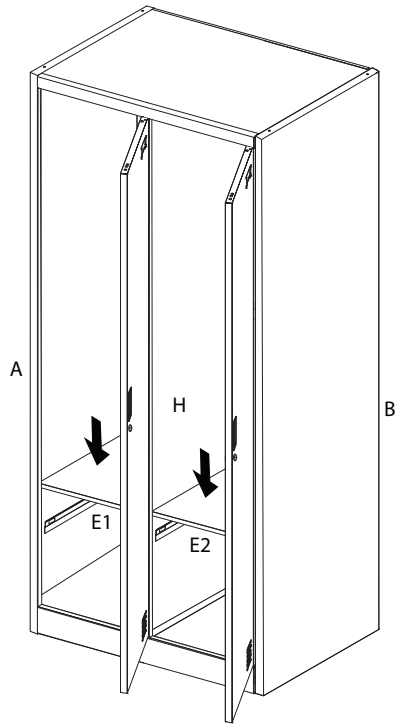

8

L1 x 1 | L2 x 1 | M x 4

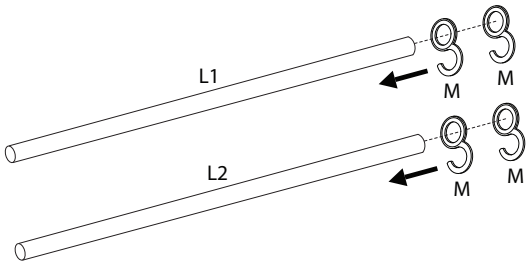

9

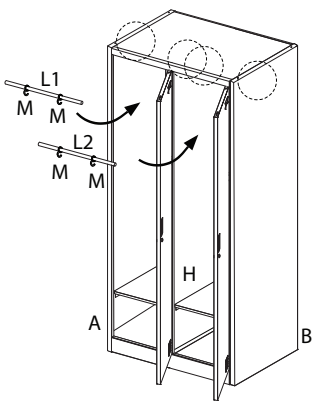

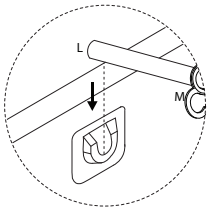

10

K

x 2

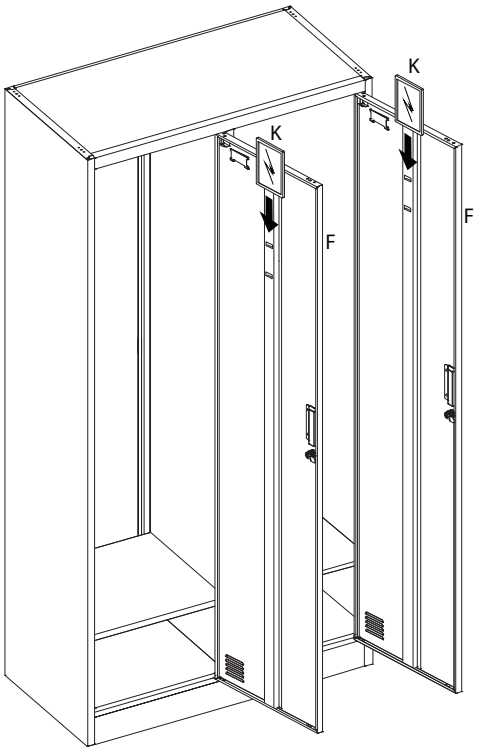

2123/ATHLETE/031125/