Installation Instruction

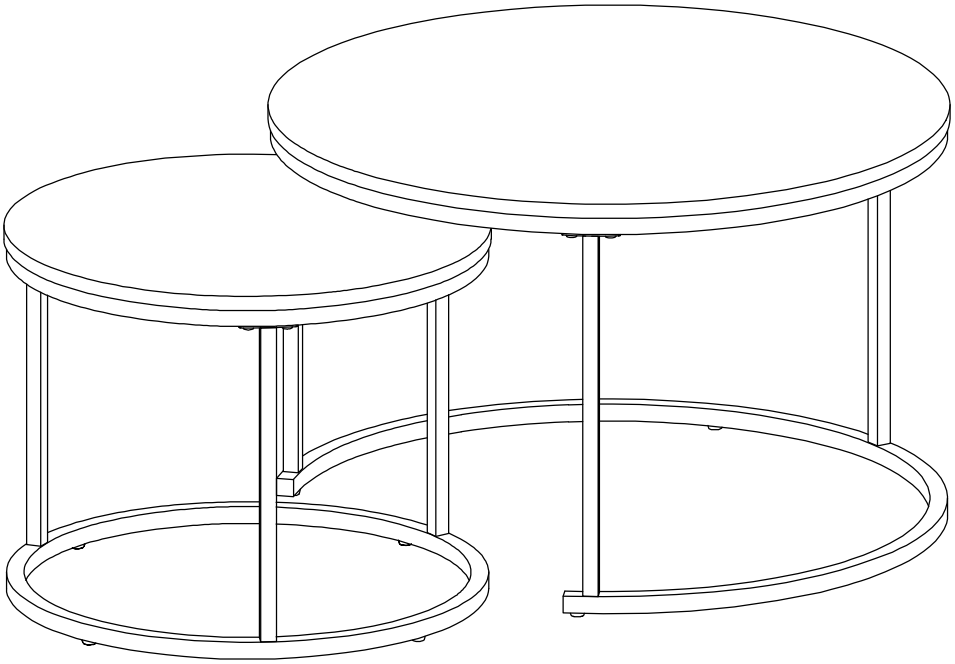

THIS INSTRUCTION BOOKLET CONTAINS IMPORTANT SAFETY INFORMATION. PLEASE READ AND KEEP FOR FUTURE REFERENCE.

If there is any reason for anything missing, damaged, incorrect or different from what you expected, please contact us for Technical Support. In order to improve efficiency, please describe the problem in detail and attach the relevant photos for us to check.Thank you for your understanding!

Technical Support

service0530@163.com

ASSEMBLY PREPARATION:

1. Remove all packaging materials, staples and packing straps from the carton.
2. Refer to PARTS LIST and HARDWARE LIST and make sure they are complete before you start assembly.
3. Place all parts on a clean, flat and soft surface (e.g. carpet or rug) to prevent parts from getting scratched.

SAFETY PRECAUTIONS:

1. KEEP ALL HARDWARE PARTS OUT OF THE REACH OF CHILDREN.
2. DISPOSE OF PLASTIC PACKAGING MATERIAL IMMEDIATELY TO AVOID ANY RISK OF SUFFOCATION TO CHILDREN OR PETS.

TIPS FOR ASSEMBLY:

1. Allow ample space for assembly and in close proximity to where the product will be placed.
2. Assemble the product on a surface that does not scratch or damage the exterior gloss and finish of the furniture.
3. Please check all of the parts and quantities are included before assembly. If any parts are missing, please contact our customer service.
4. Identify all of the parts, hardware and quantities required for each step.
5. Do not over-tighten any fittings during assembly, as this may cause damage.
6. DO NOT USE POWER TOOLS TO ASSEMBLE THIS PRODUCT.
7. Always place the product on a flat surface.
8. Do not sit or stand on the partially assembled product; only to use the product for which it is intended.

ASSEMBLY INSTRUCTION

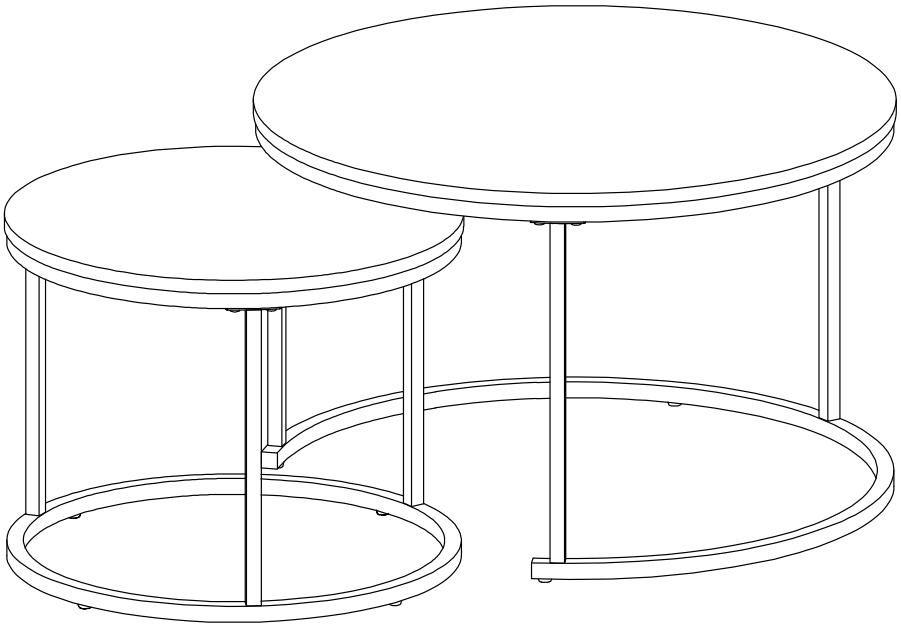

A	x 6	B	x 12	C	x 8	D	x 1
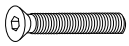							
M6x35mm		M6x15mm		Φ19mm		4mm	

To avoid any mistakes, pls check A screws and B screws carefully before assembling.
Note: Incorrectly assembled A and B screws can cause a puncture through the tabletop!

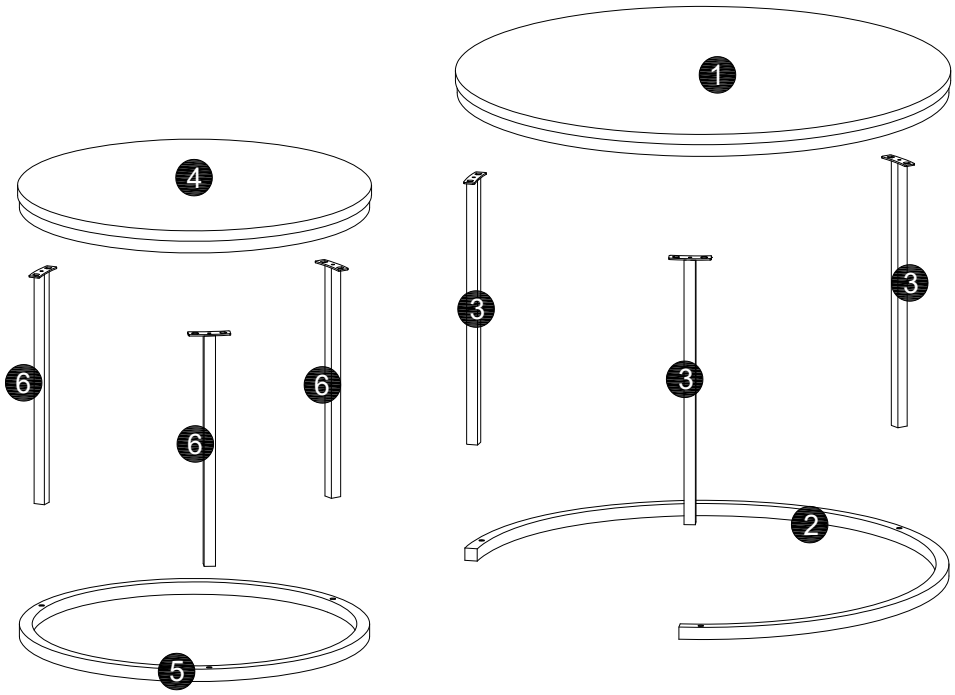

ASSEMBLY INSTRUCTION

1

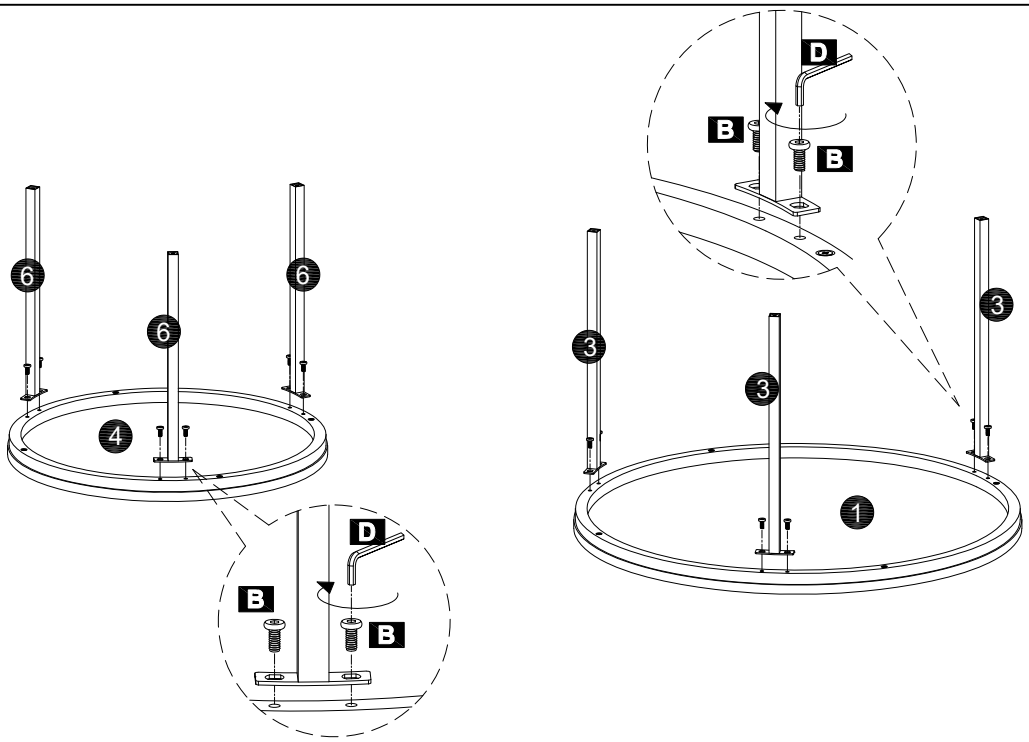

2

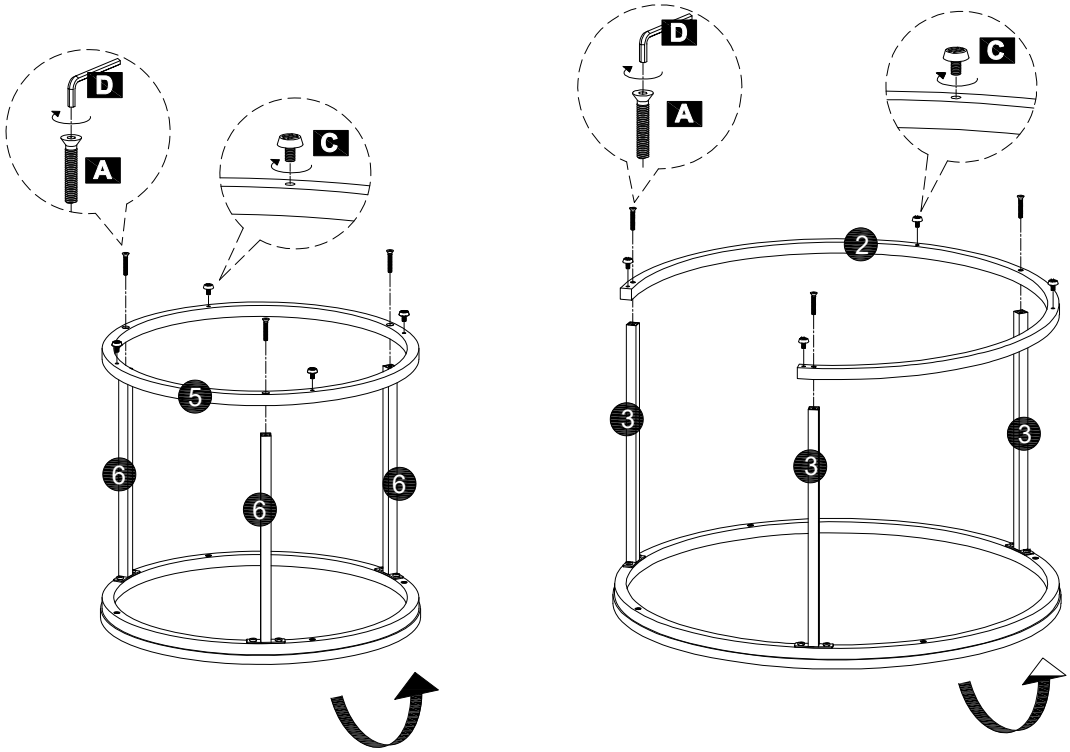
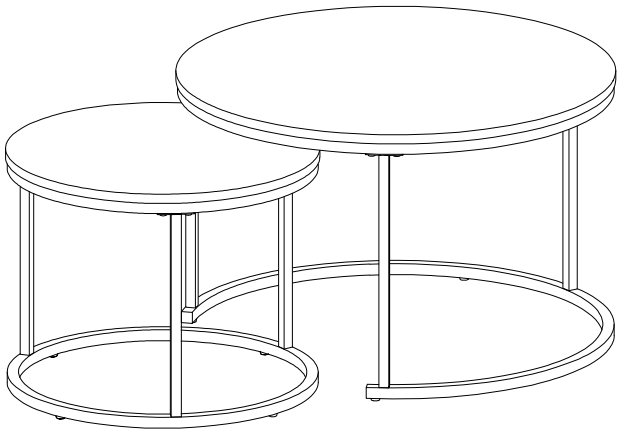
3