BLYTHE

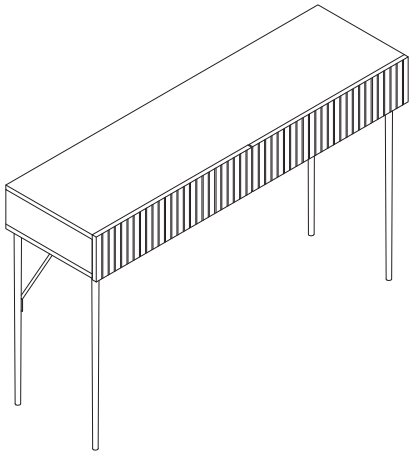

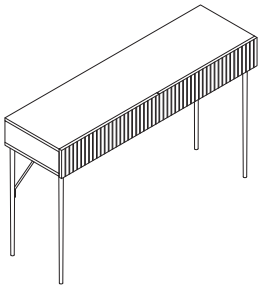

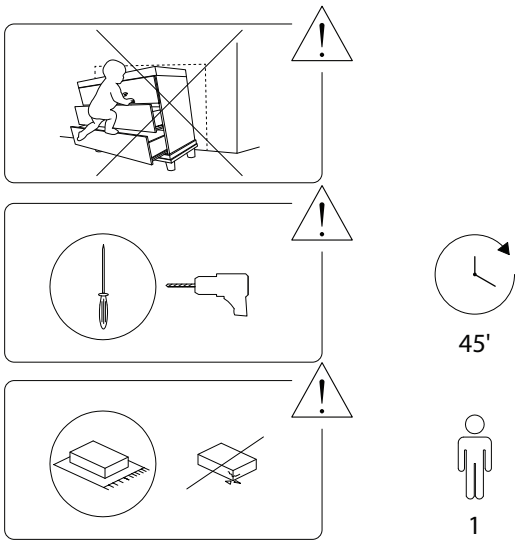
45'
1

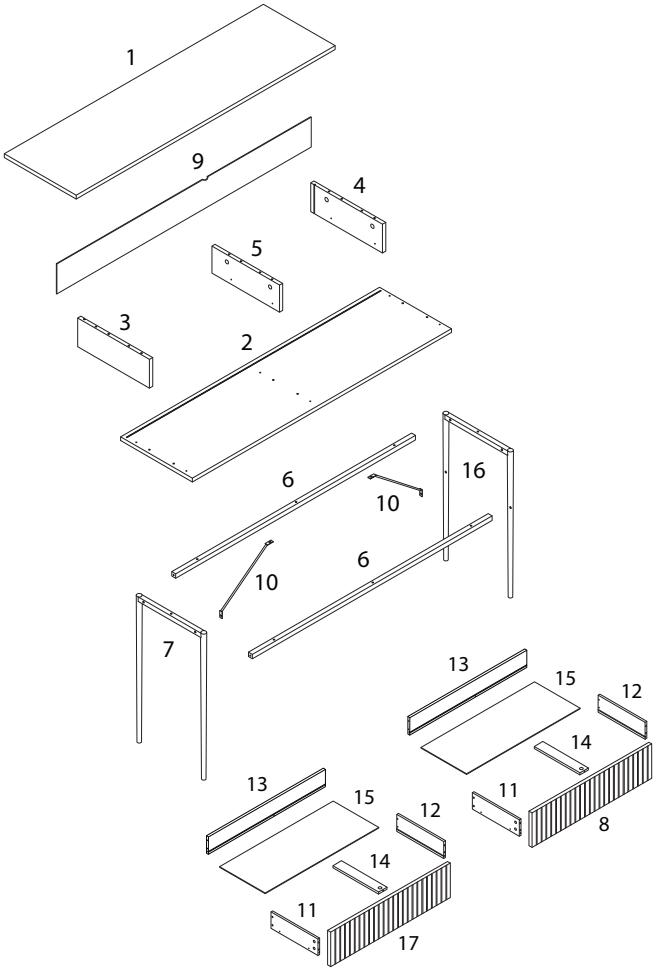
1
9
4
5
3
2
6
16
10
10
6
7
13
15
12
14
11
8
13
15
12
14
11
17

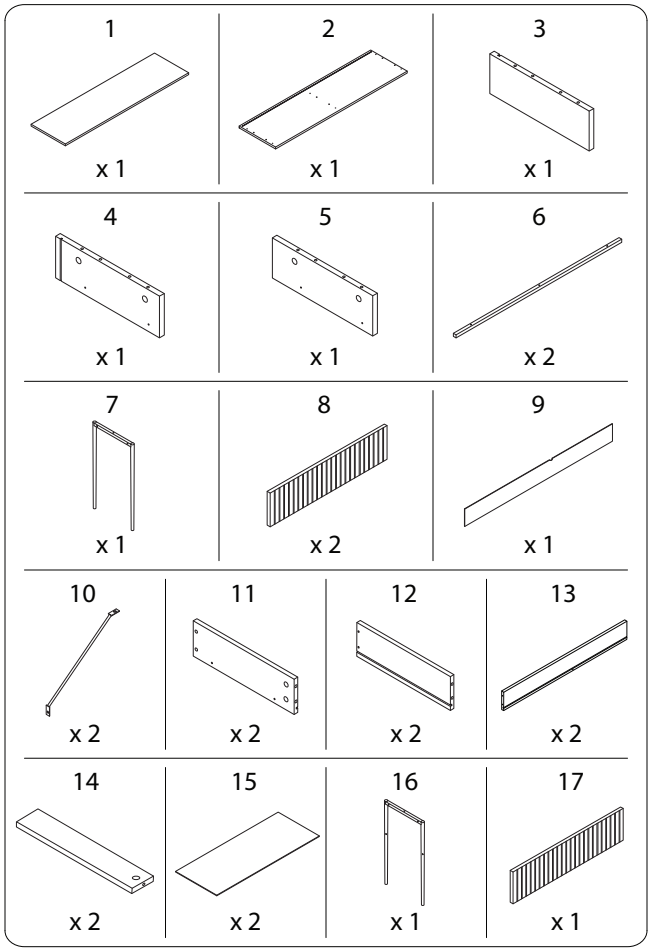
1
x 1
2
x 1
3
x 1
4
x 1
5
x 1
6
x 2
7
x 1
8
x 2
9
x 1
10
x 2
11
x 2
12
x 2
13
x 2
14
x 2
15
x 2
16
x 1
17
x 1

A	B
 x 16	 x 16

C	D	E
 x 14	 M4 x 40 x 6	 M3 x 12 x 16
F	**CL**	**CR**
 M4 x 30 x 10	 x 2	 x 2
DL	**DR**	**H**
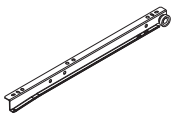 x 2	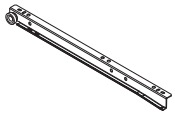 x 2	 M6 x 30 x 12
I	**J**	**K**
 x 1	 M4 x 12 x 1	 M6 x 10 x 4

1

5	E	CL	CR
x 1	M3 x 12 x 4	x 1	x 1

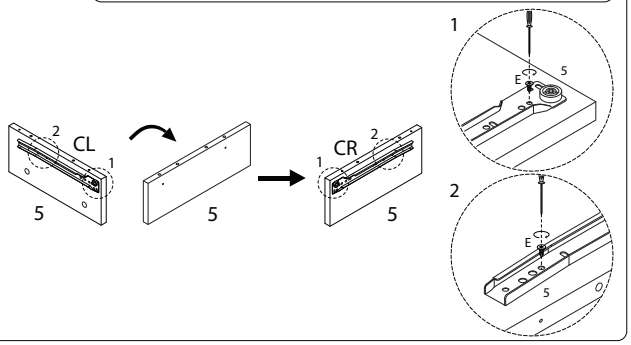

2

3	4	E	CL	CR
x 1	x 1	M3 x 12 x 4	x 1	x 1

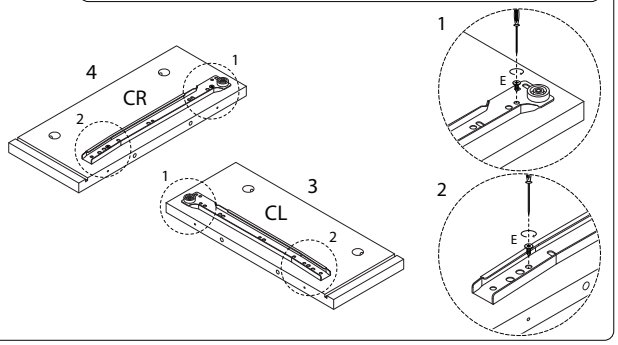

3

1	A	C
x 1	x 6	x 6

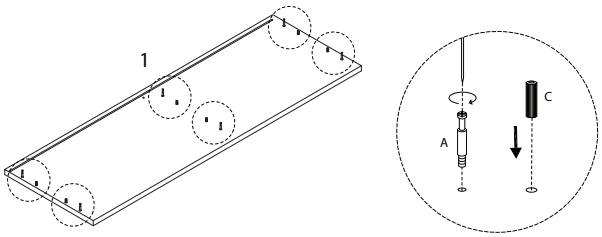

5

B
x 6

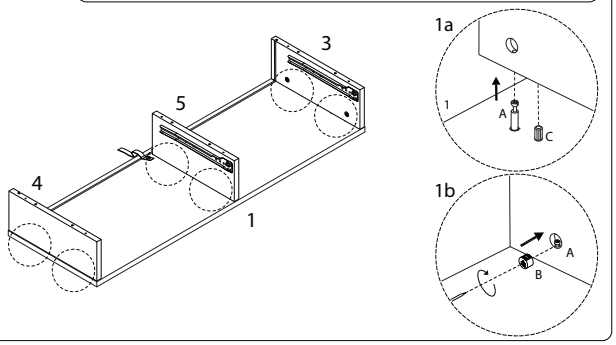

4

I	J
x 1	M4 x 12 x 1

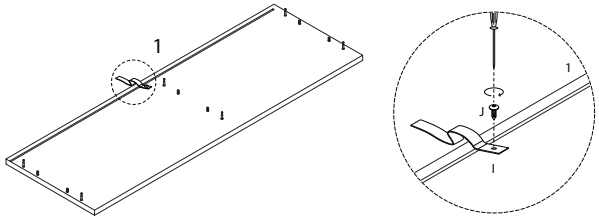

6

9
x 1

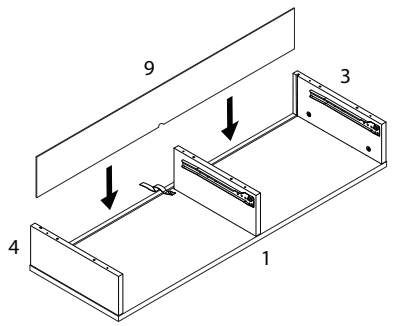

7

C
x 6

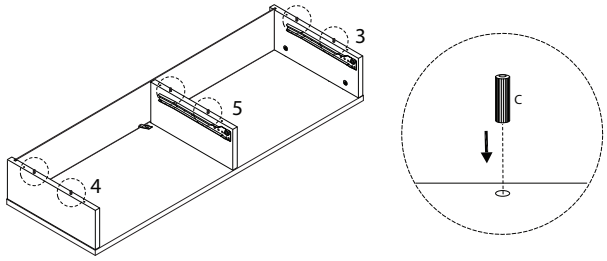

8

2
x 1

D
M4 x 40
x 6

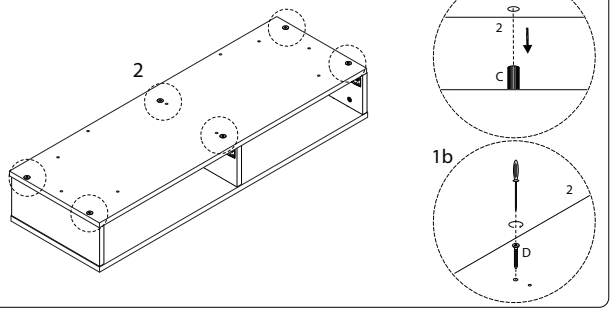

9

6
x 2

7
x 1

16
x 1

H
M6 x 30
x 4

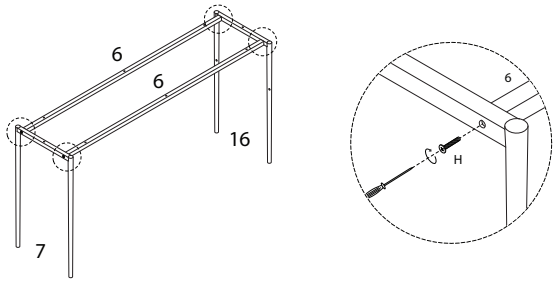

10

10
x 2

K
M6 x 10
x 4

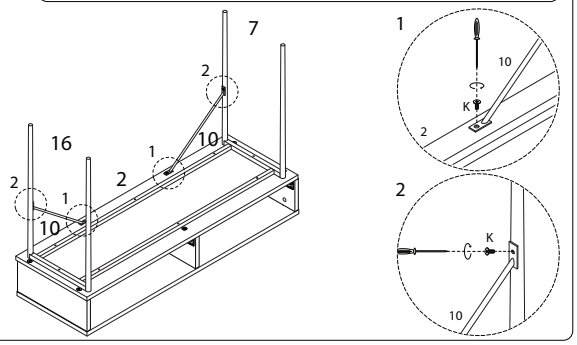

11

H
M6 x 30
x 8

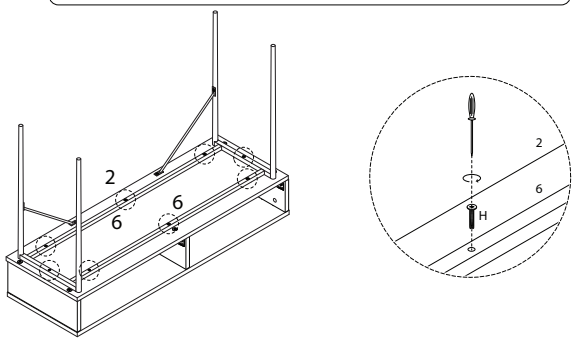

13 x 2

14
x 1

F
M4 x 30
x 1

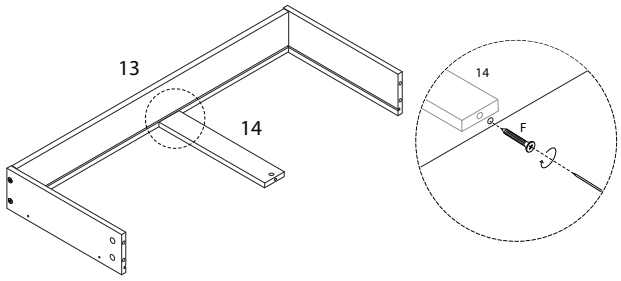

12 x 2

11
x 1

12
x 1

13
x 1

F
M4 x 30
x 4

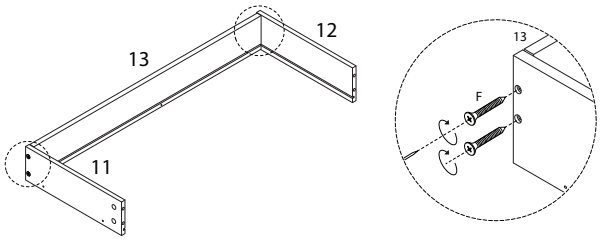

14 x 2

15
x 1

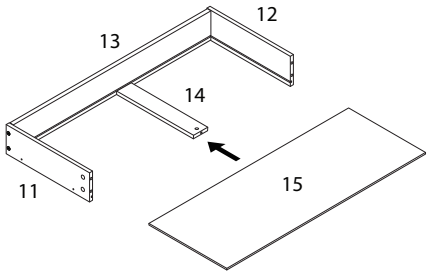

15

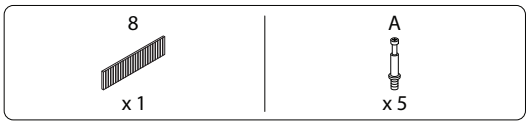

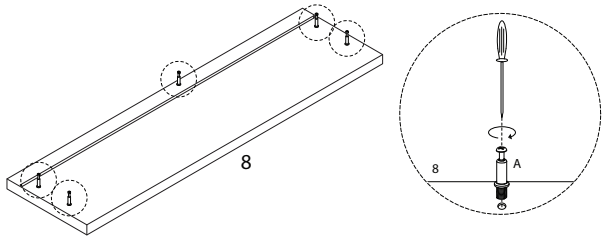

16

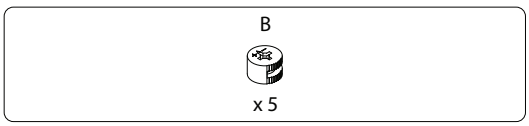

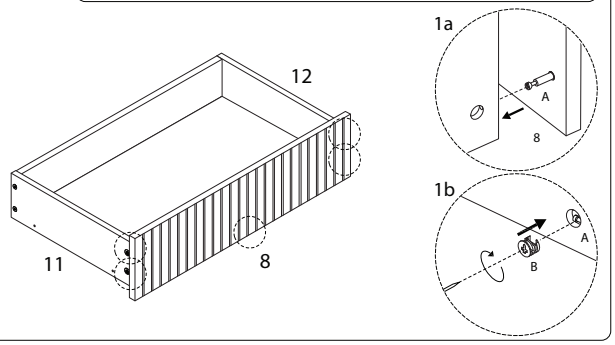

17

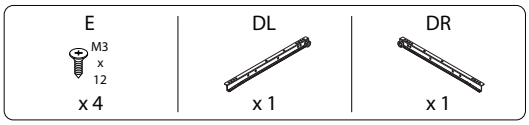

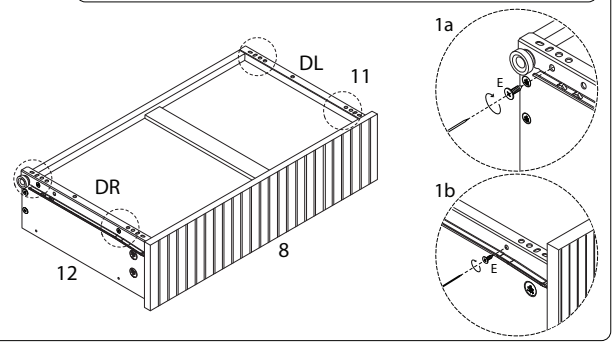

18

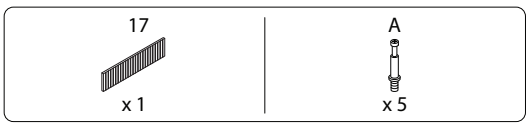

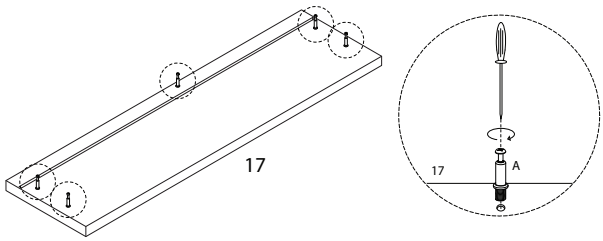

19

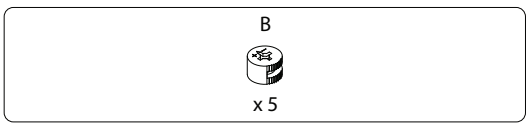

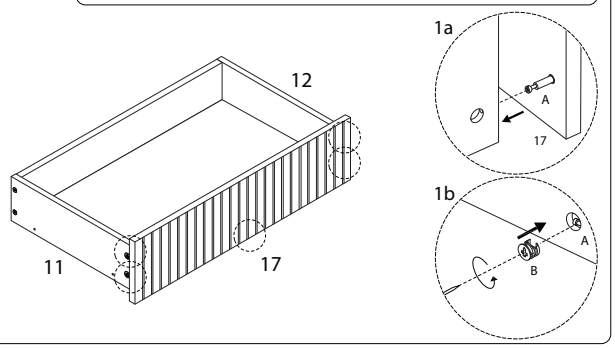

20

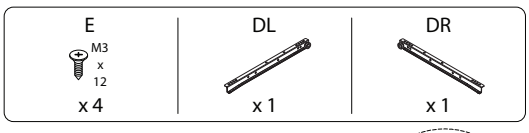

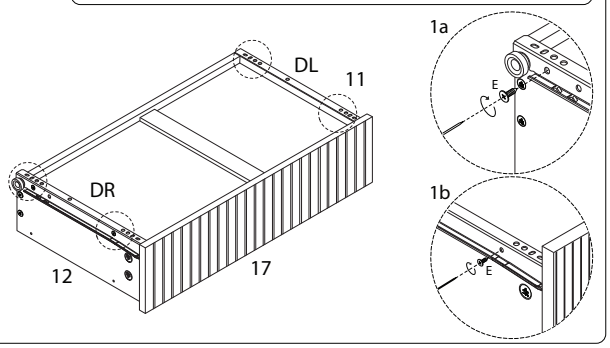

21

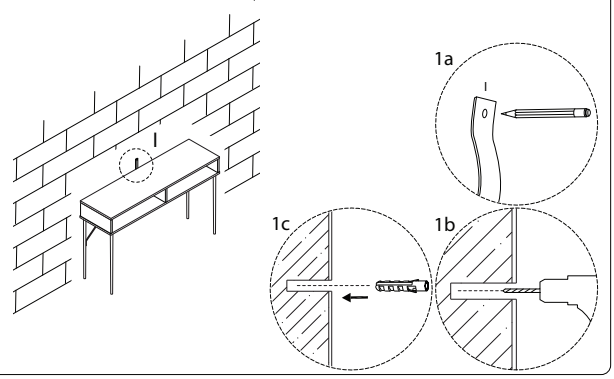

22

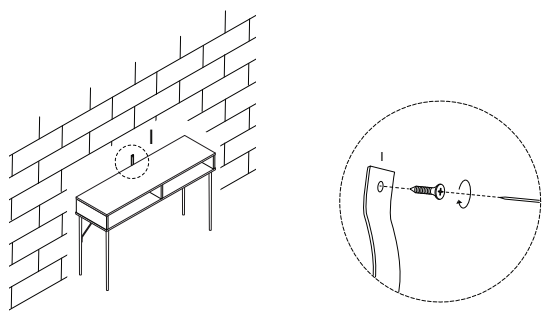

23

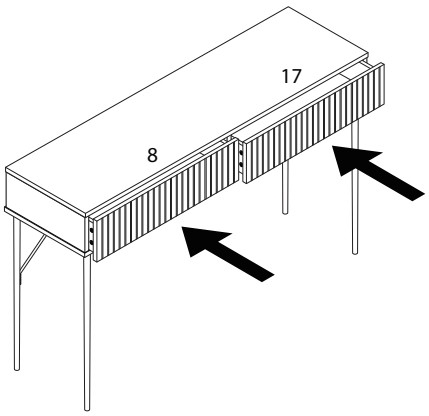

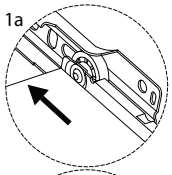

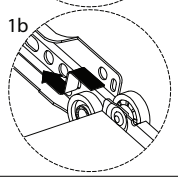

1444/BLYTHE/160126/