A	B	C	D	E
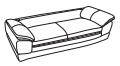				
x 1	x 1	x 4	x 8	x 8

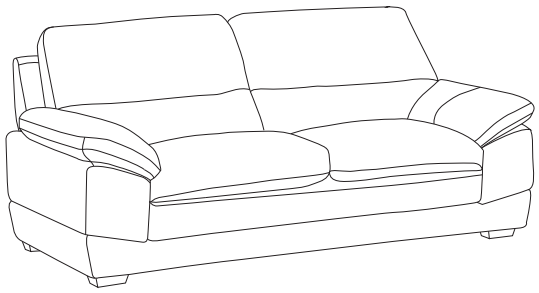

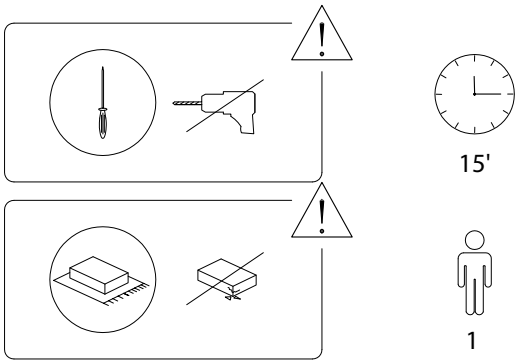

1033/SOFA.HORTEN/26062019/

B x 1

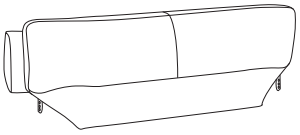

A x 1

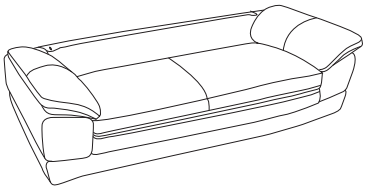



C x 4

1033/SOFA.HORTEN/26062019/

!

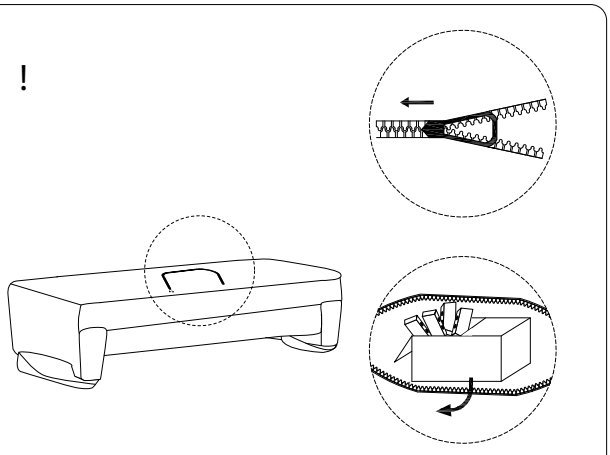

2

E

x 8

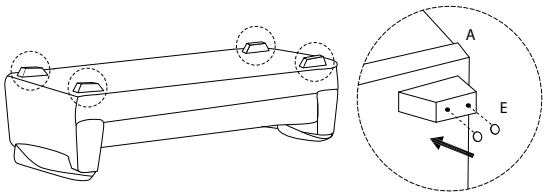

1

A	C	D
		
x 1	x 4	x 8

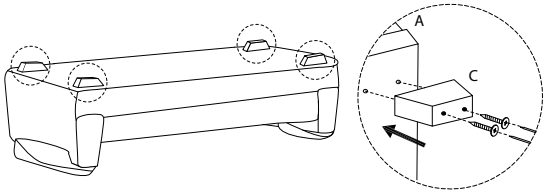

1033/SOFA.HORTEN/26062019/

3

B
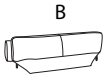
x 1

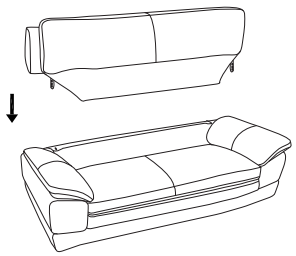

1033/SOFA.HORTEN/26062019/