LOUSTO

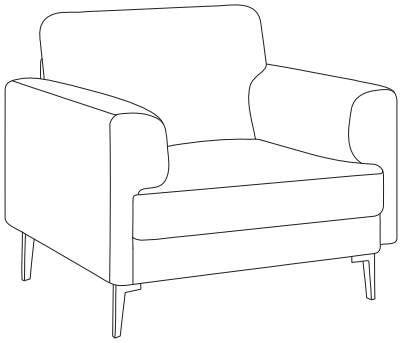

1/6

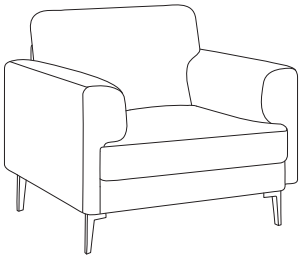

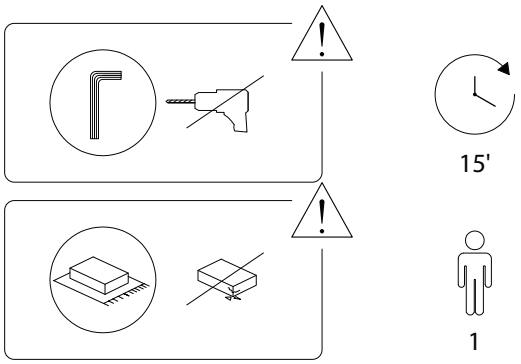

2/6

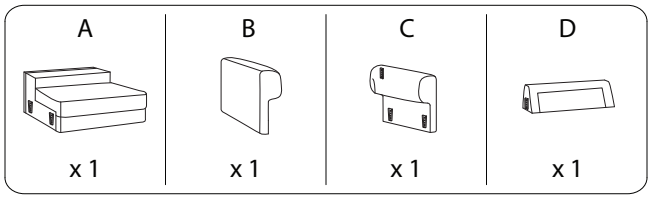

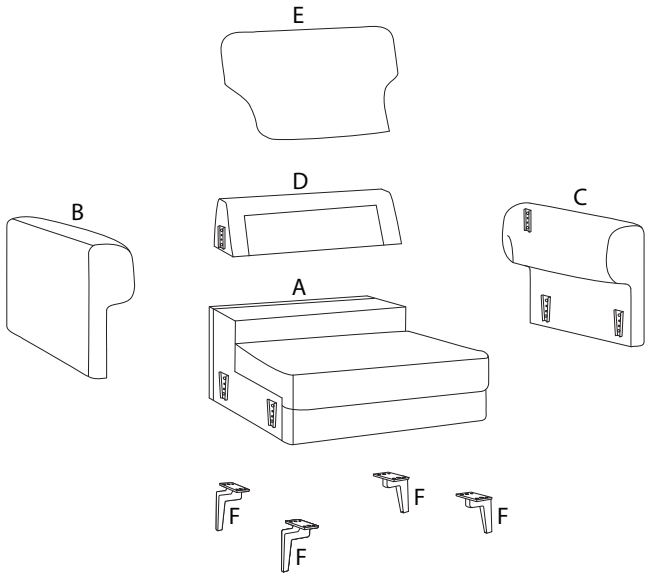

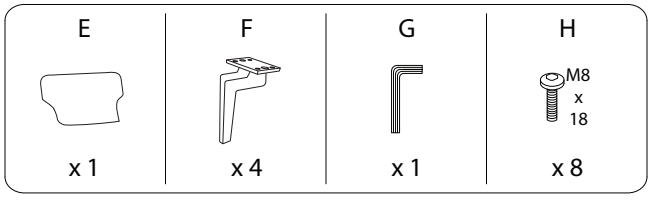

3/6

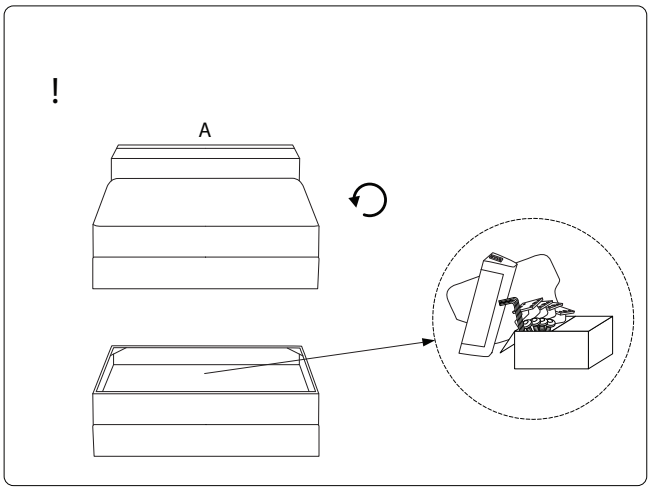

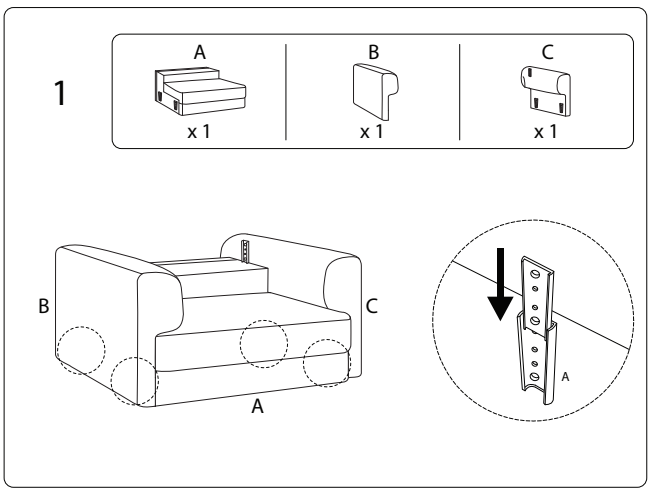

4/6

2

D

x 1

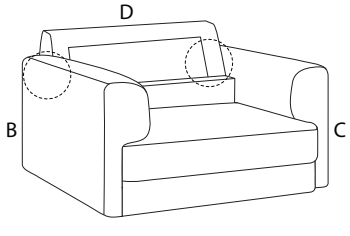

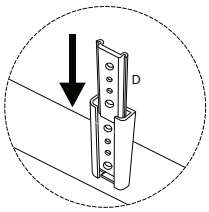

3

F	G	H
x 4	x 1	x 8

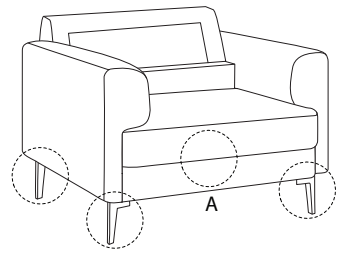

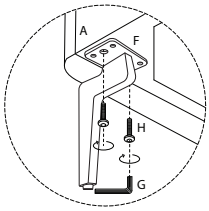

4

E

x 1

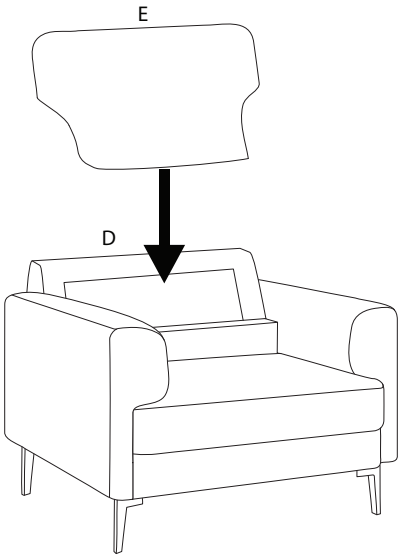

590/LOUSTO/200226/