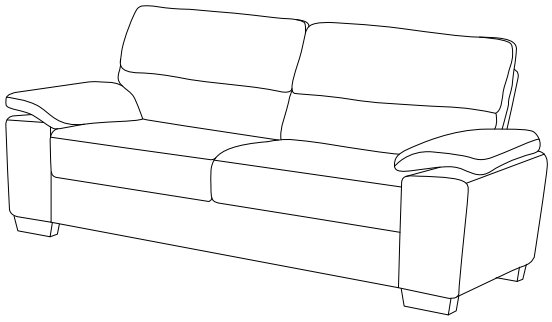

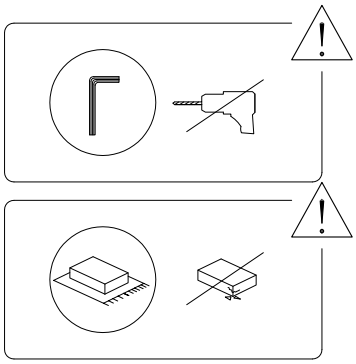


15'


1

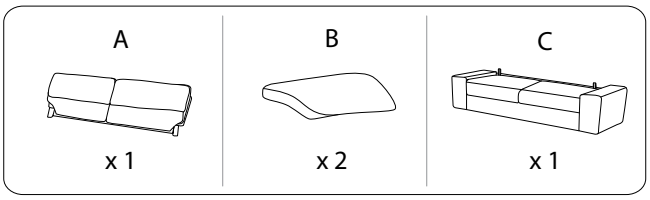
A
x 1
B
x 2
C
x 1

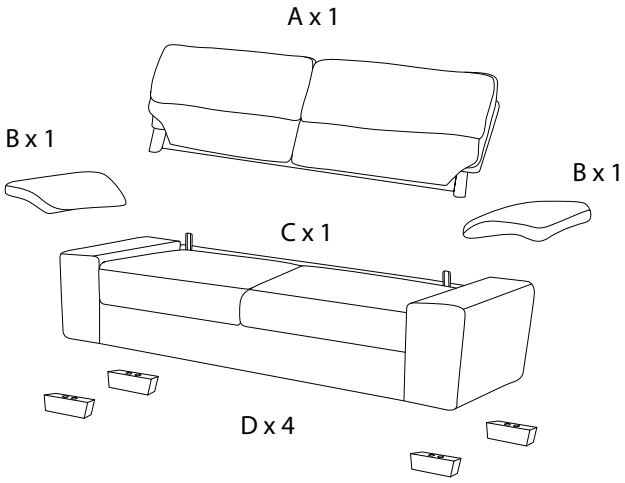
A x 1
B x 1
B x 1
C x 1
D x 4

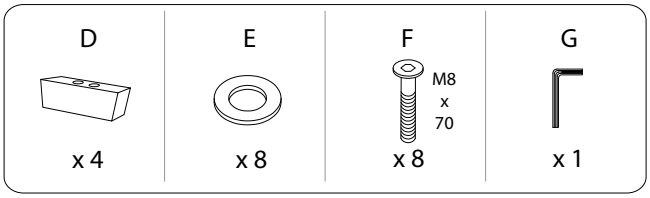
D
x 4
E
x 8
F
M8
x
70
x 8
G
x 1

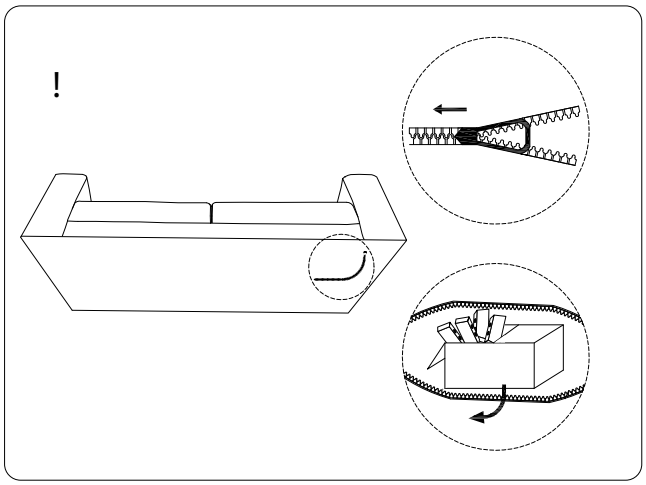
!

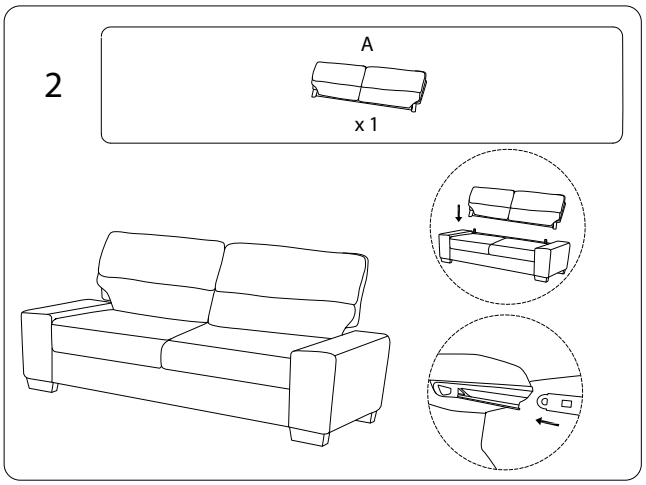
2
A
x 1

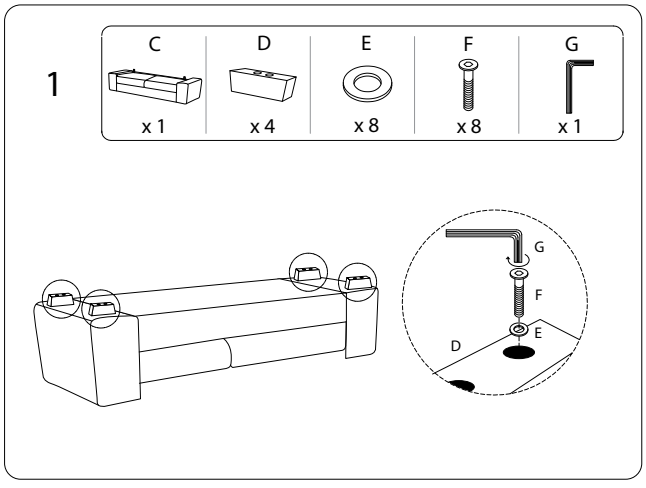
1
C
x 1
D
x 4
E
x 8
F
x 8
G
x 1
G
F
E
D

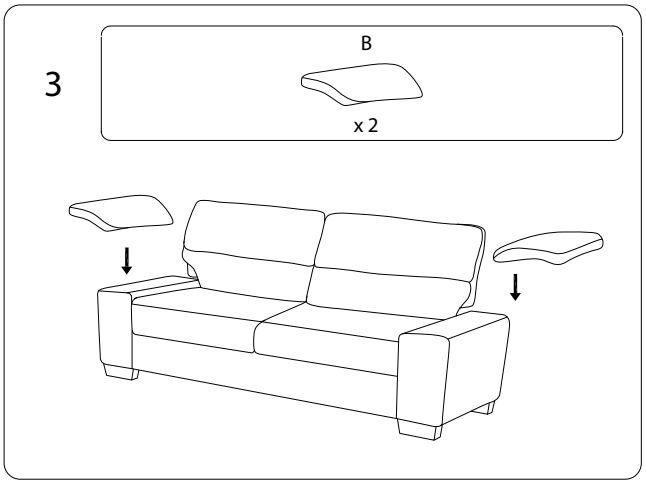
3
B
x 2