ASSISI

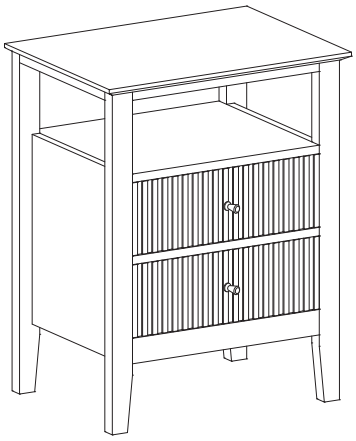

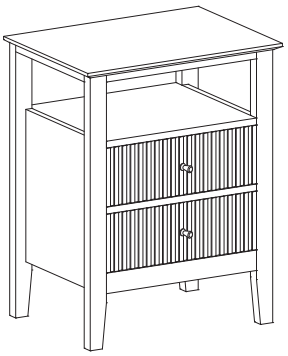

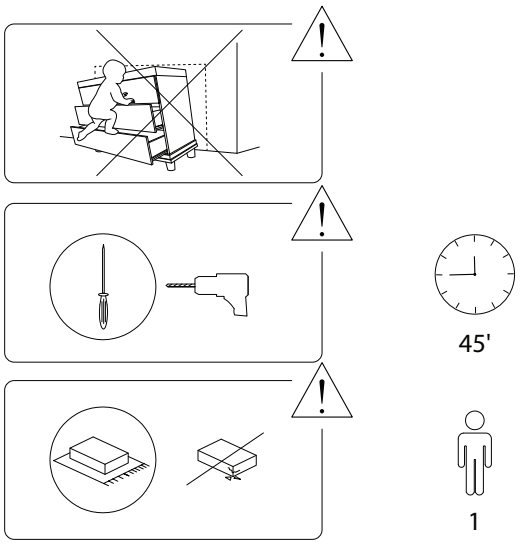

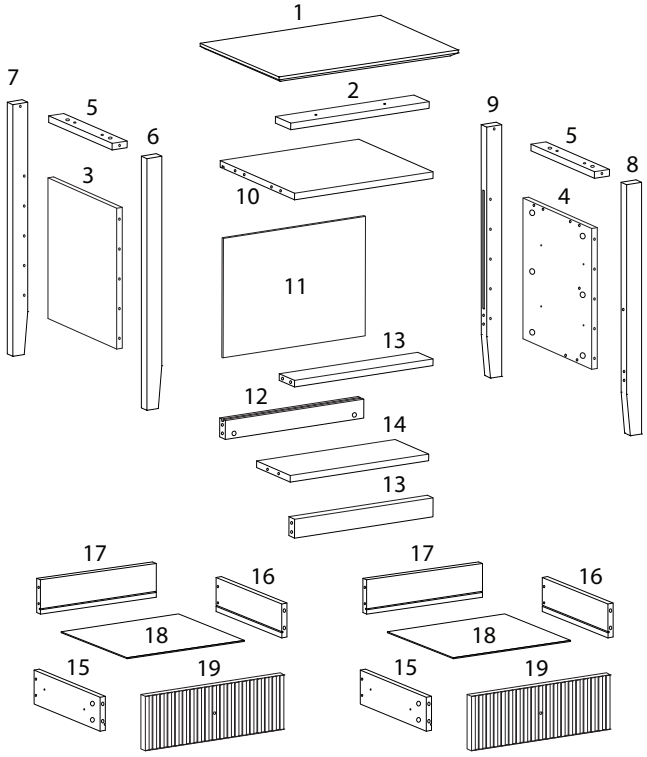

1	2	3	4
x 1	x 1	x 1	x 1

5	6	7
x 2	x 1	x 1
8	**9**	**10**
x 1	x 1	x 1
11	**12**	**13**
x 1	x 1	x 2
14	**15**	**16**
x 1	x 2	x 2
17	**18**	**19**
x 2	x 2	x 2

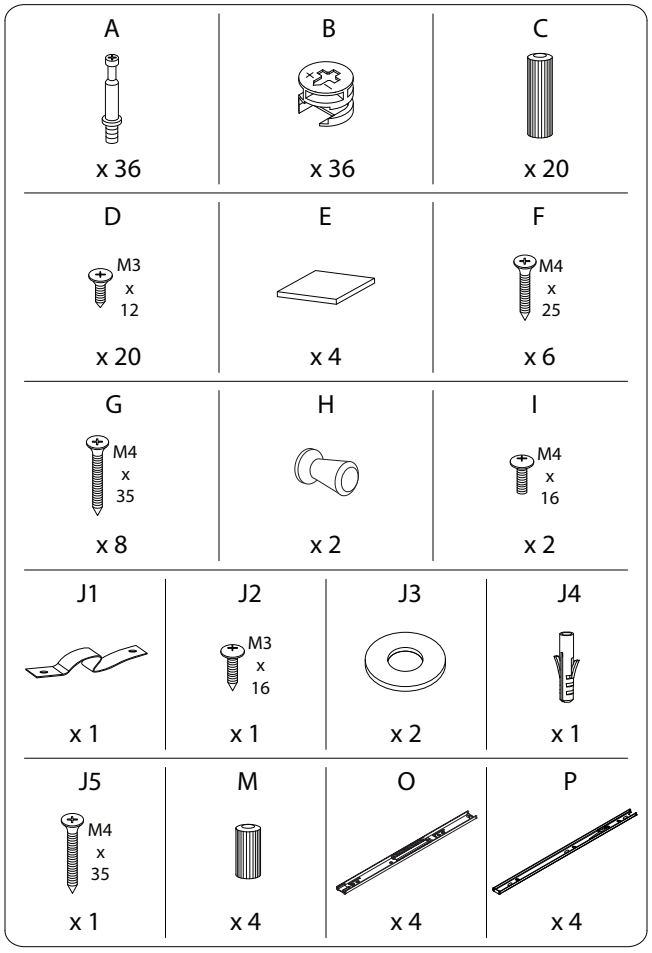
A
x 36
B
x 36
C
x 20
D
M3 x 12
x 20
E
x 4
F
M4 x 25
x 6
G
M4 x 35
x 8
H
x 2
I
M4 x 16
x 2
J1
x 1
J2
M3 x 16
x 1
J3
x 2
J4
x 1
J5
M4 x 35
x 1
M
x 4
O
x 4
P
x 4

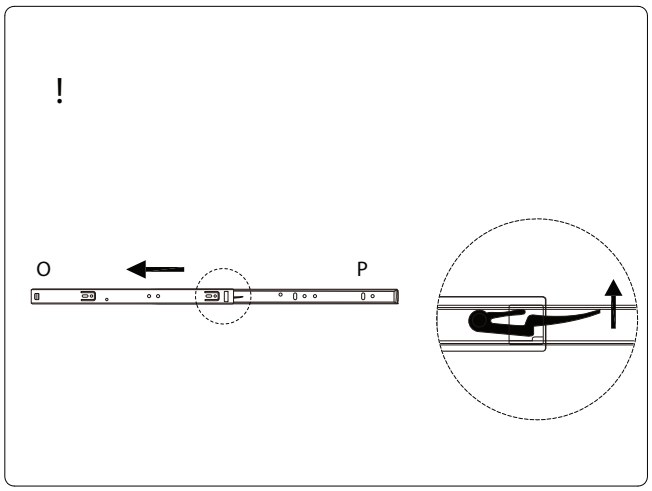
!
O
P

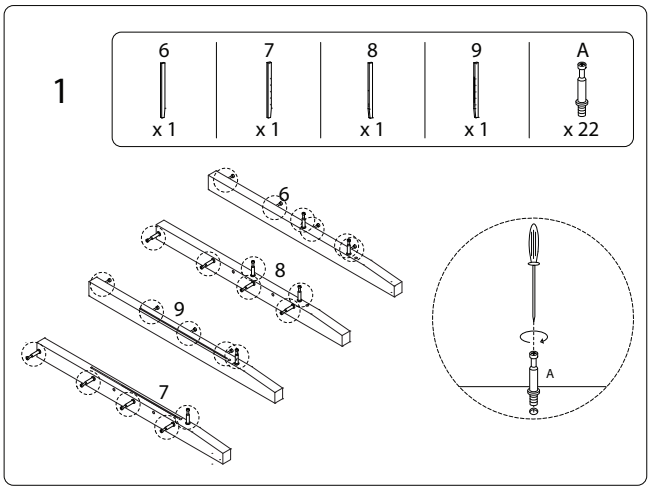
1
6
x 1
7
x 1
8
x 1
9
x 1
A
x 22
6
8
9
7
A

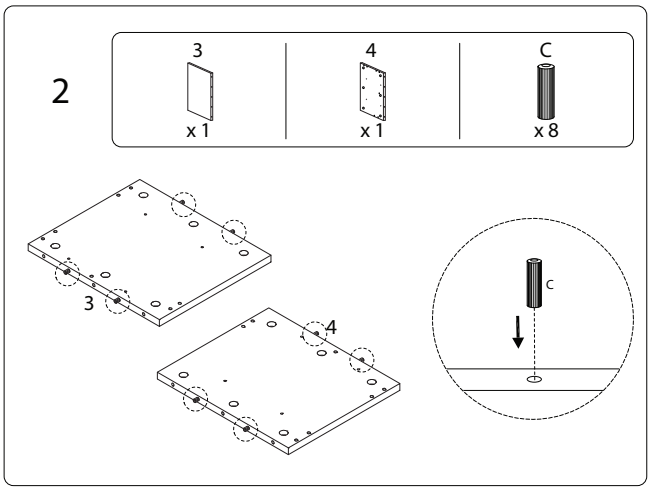
2
3
x 1
4
x 1
C
x 8
3
4
C

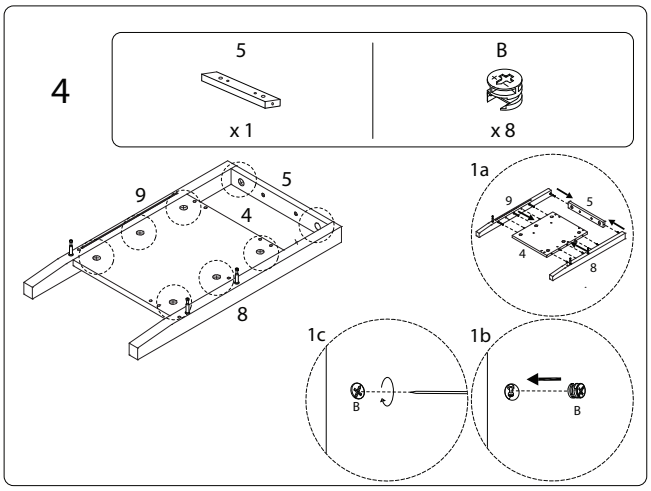
4
5
x 1
B
x 8
9
5
4
8
1a
9
5
4
8
1c
1b
B
B

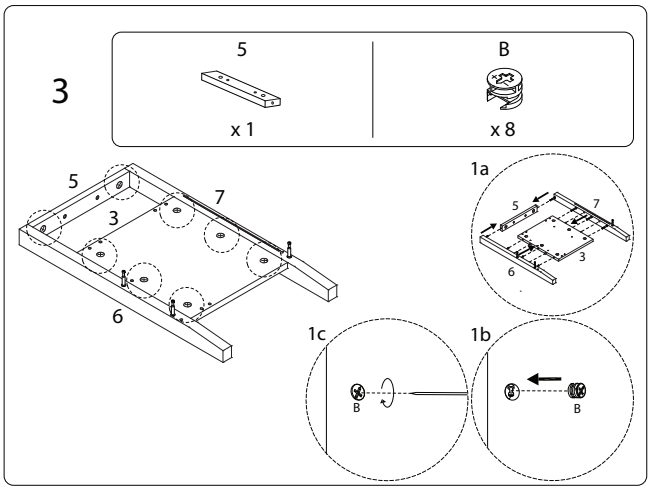
3
5
x 1
B
x 8
5
7
3
6
1a
5
7
6
3
1c
1b
B
B

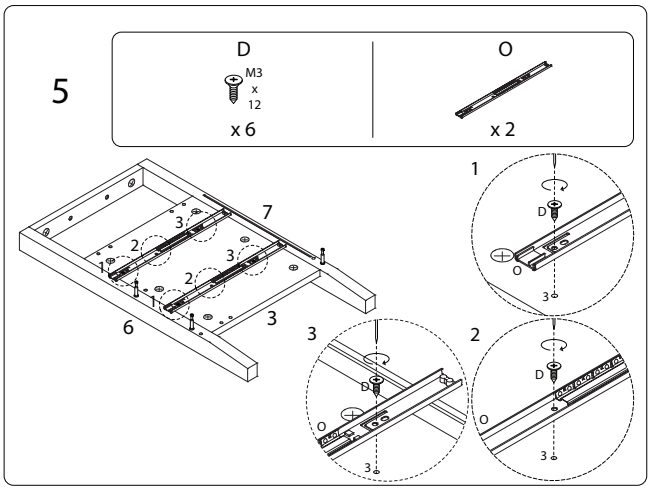
5
D
M3 x 12
x 6
O
x 2
7
3
2
3
2
6
3
1
D
O
3
3
D
O
3
2
D
O
3

6

A
x 3

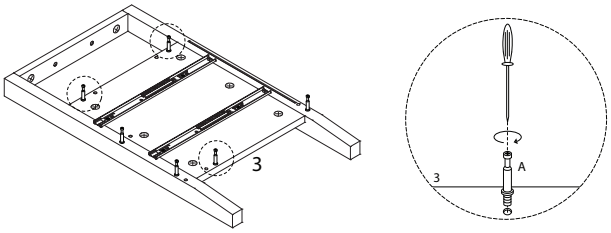

7

D
M3 x 12
x 6

O
x 2

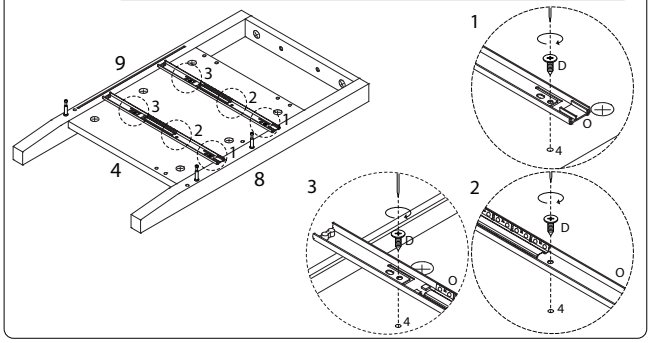

8

A
x 3

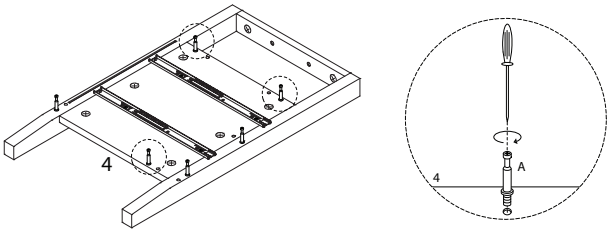

9

10	12	13	14	C
x 1	x 1	x 2	x 1	x 12

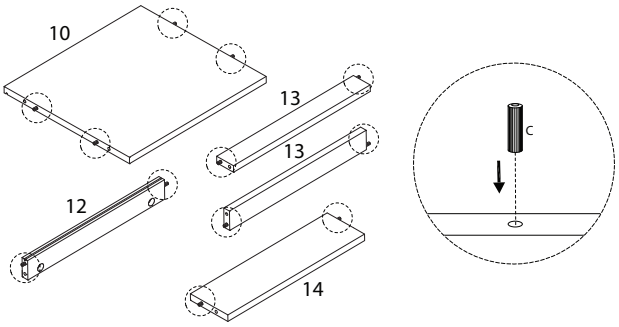

10

B
x 6

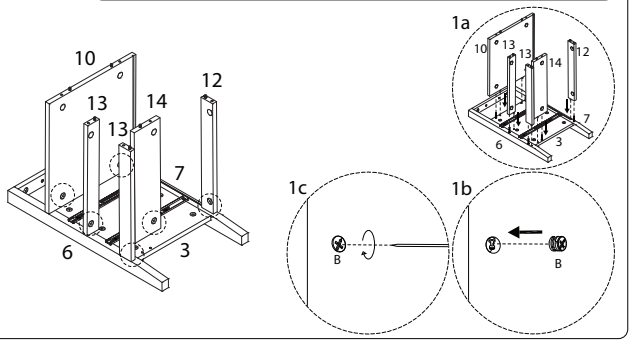

11

11
x 1

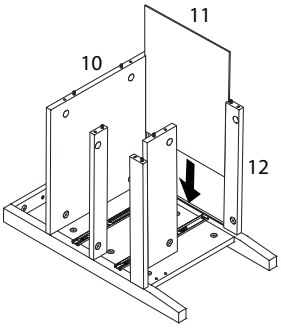

12

B
x 6

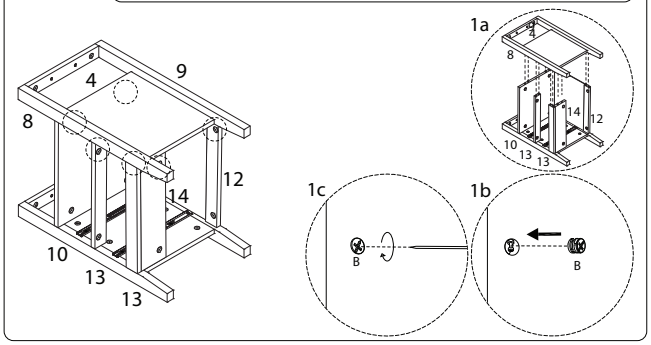

13

E
x 4

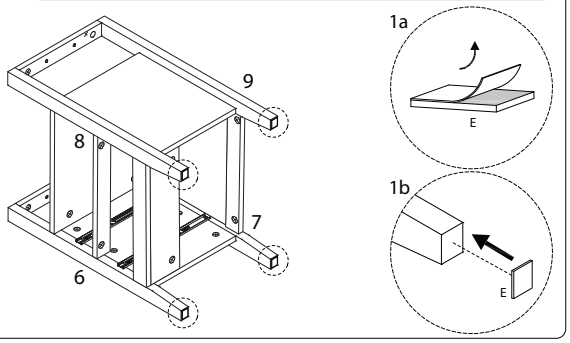

14

1	2	F
x 1	x 1	M4 x 25 x 2

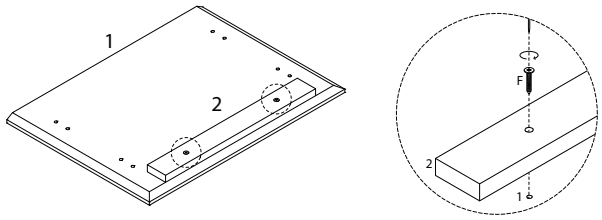

15

M
x 4

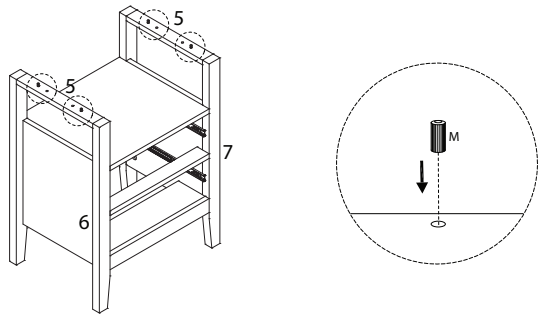

16

F
M4 x 25 x 4

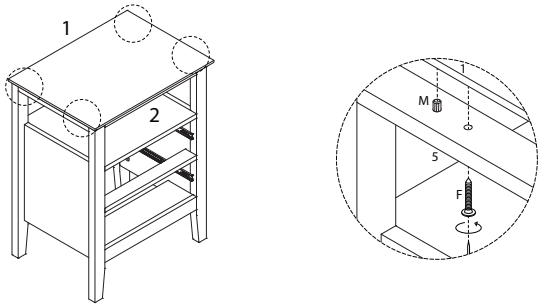

17 x 2

19	A
x 1	x 4

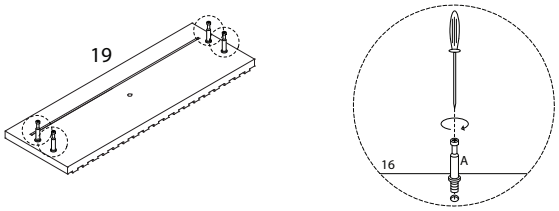

18 x 2

15	16	B
x 1	x 1	x 4

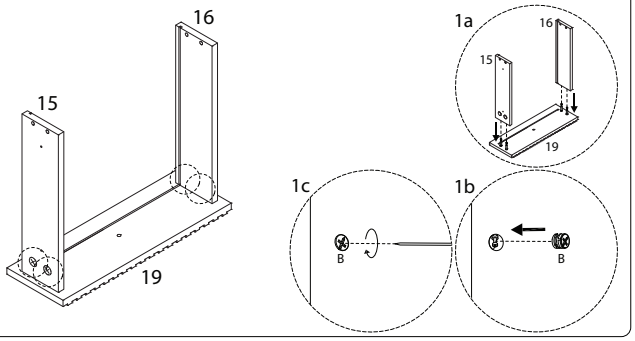

19 x 2

18
x 1

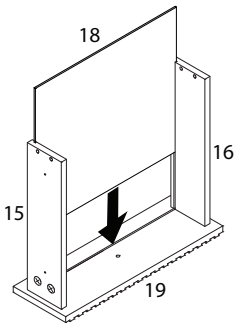

20 x 2

17	G
x 1	M4 x 35 x 4

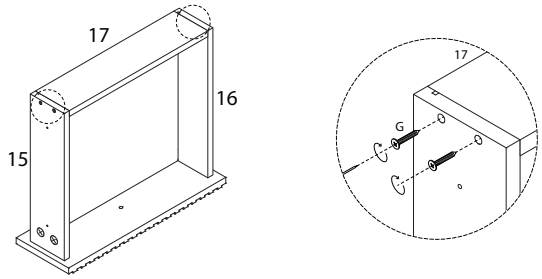

21 x 2

D	P
M3 x 12 x 4	x 2

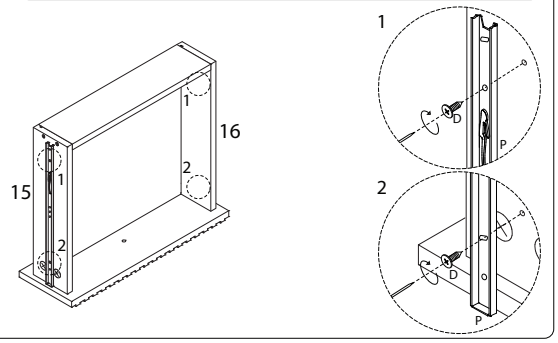

22 x 2

H	I
x 1	M4 x 15 x 1

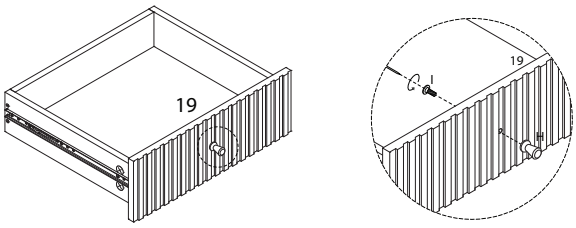

23

J1	J2	J3
x 1	M3 x 16 x 1	x 1

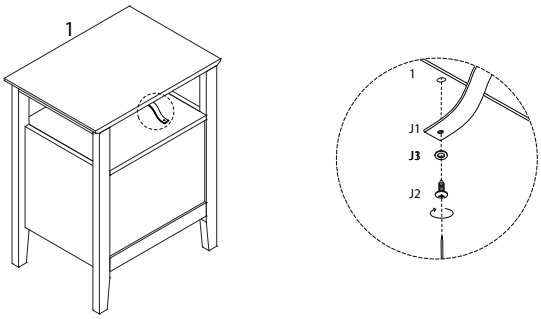

24

J3	J4	J5
x 1	x 1	M4 x 35 x 1

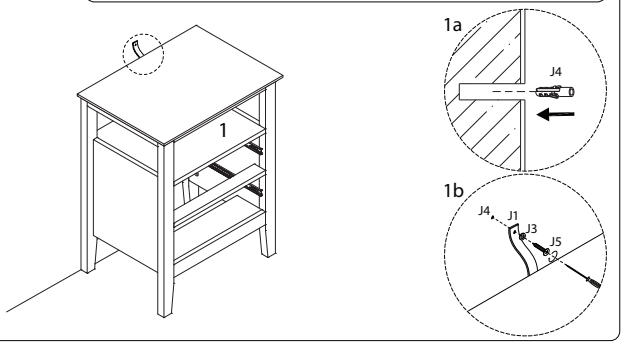
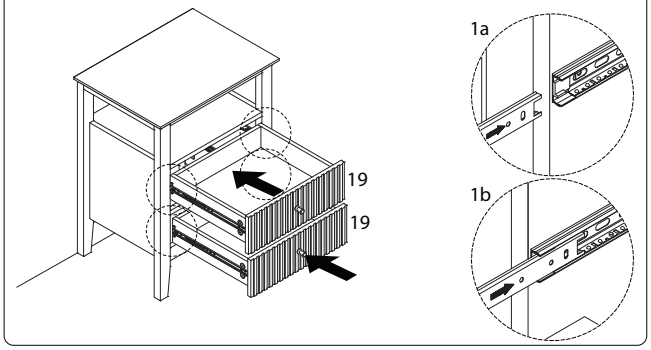
25